DVD Receiver

LX8320SA/69/93

Service
Service
Service

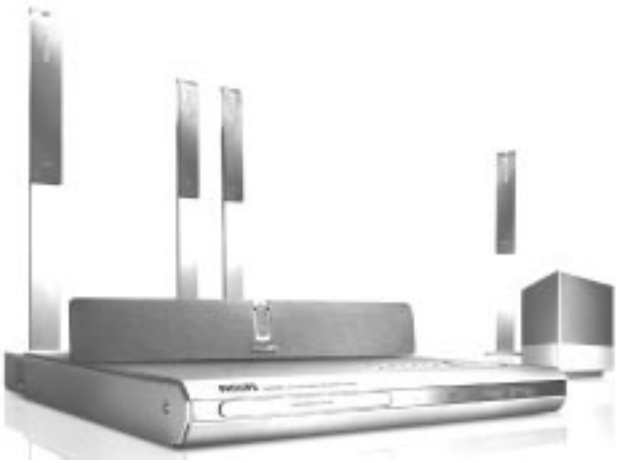

Service Manual

TABLE OF CONTENTS

	Page
Location of pc boards & Version variations	1-2
Technical Specifications	1-3
Measurement setup	1-4
Service Aids, Safety Instruction, etc.	1-5
Disassembly Instructions & Service positions	2
Service Test Program	3-1
Region code, Software version & upgrades	3-2
Set Block diagram	4-1
Set Wiring diagram	5-1
Panel Front Boards	6
AV Board	7
Box Spk Assy SW8320LX	8
Module SD6.3 ST AV2	9
Set Mechanical Exploded view & parts list	10
Speaker Box Exploded view & parts list	11-1
Speaker Box Disassembly Instructions	11-2

CLASS 1
LASER PRODUCT

© Copyright 2004 Philips Consumer Electronics B.V. Eindhoven, The Netherlands
All rights reserved. No part of this publication may be reproduced, stored in a retrieval system or transmitted, in any form or by any means, electronic, mechanical, photocopying, or otherwise without the prior permission of Philips.

Published by BB0436 Service AV Systems Printed in The Netherlands Subject to modification

GB 3139 785 30830

Version 1.0

PHILIPS

LOCATION OF PC BOARDS

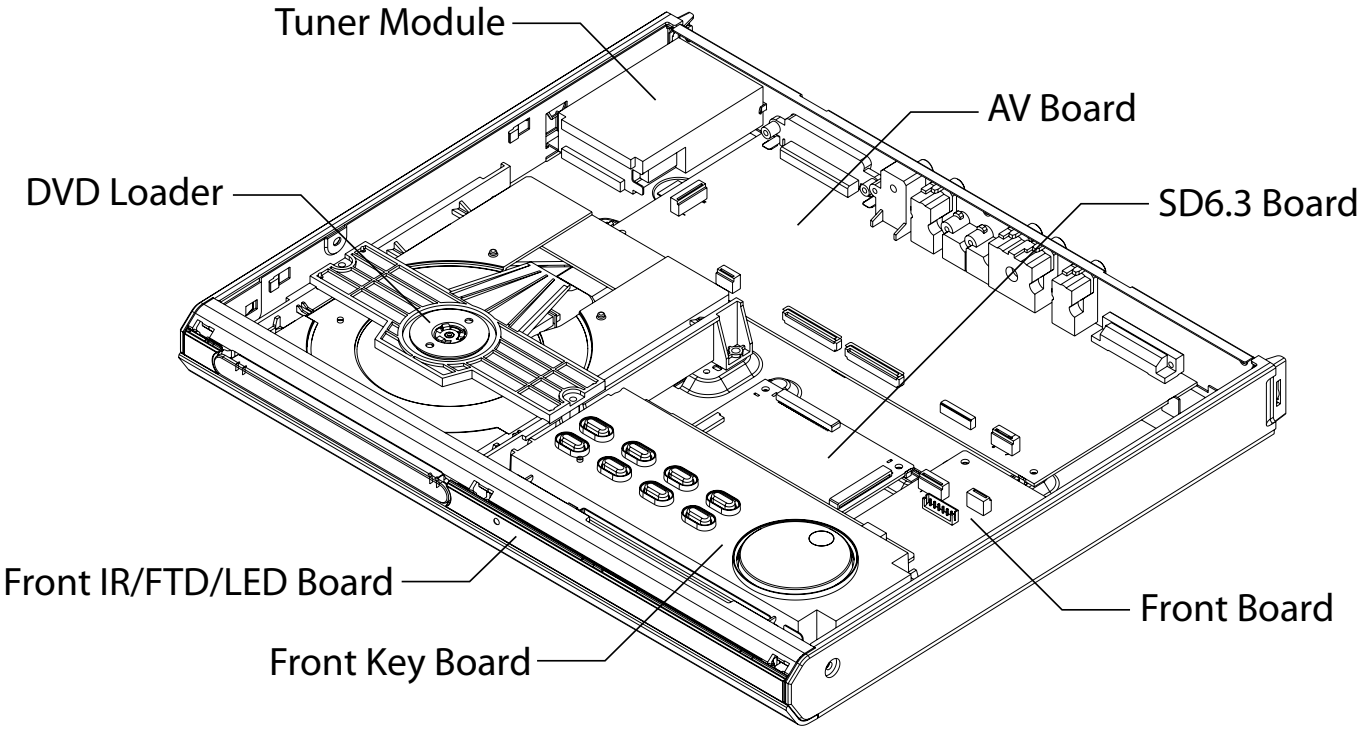

VERSION VARIATIONS:

Type /Versions: / Features & Board in used:	LX8320SA							
	/69	/93						
Progressive Scan	x	x						
Voltage Selector	x	x						
Digital In	x	x						
TV-In	x	x						
Aux-In	x	x						
Line-Out	x	x						
Video Output	x	x						
S-Video Output	x	x						
SCART								
Y/Pb/Pr (YUV) Component Video Output	x	x						

SPECIFICATIONS

GENERAL:

Mains voltage : 120V for /17
220-240V for /01/04/05
110-127V/220-240V Switchable for /69/93
Mains frequency : 50/60Hz
Power consumption : < 1W at Standby
< 160W at 1/8 P_{rated}
Dimension main unit : 360 x 40 x 305mm

TUNER:

FM

Tuning range : 87.5-108MHz
Grid : 50kHz
100kHz for /17/69
IF frequency : 10.7MHz ± 25kHz
Aerial input : 75Ω coaxial
Sensitivity at 26dB S/N : < 7µV
Selectivity at 600kHz bandwidth : > 25dB
IF rejection : > 60dB
Image rejection : > 25dB
Distortion at RF=1mV, dev. 75kHz : < 3%
-3dB Limiting point : 8µV
Crosstalk at RF=1mV, dev. 67.5kHz : > 28dB
Crosstalk at RF=1mV, dev. 40kHz : > 18dB /17/69

MW

Tuning range : 531-1602kHz
530-1700kHz for /17/69
Grid : 9kHz
10kHz for /17/69
IF frequency : 450kHz ± 1kHz
Aerial input : Frame aerial
Sensitivity at 26dB S/N : < 4.0mV/M
Selectivity at 18kHz bandwidth : > 20dB
IF rejection : > 45dB
Image rejection : > 28dB
Distortion at RF=50mV, m=80% : < 5%

AMPLIFIER:

Output power
Front : 100W RMS / channel
Rear : 75W RMS / channel
Center : 100W RMS
Subwoofer : 150W RMS

Frequency response ±3dB : 20Hz-50kHz
Hum (Volume Minimum) : 200nW
Residual noise (Volume Minimum) : 40nW

Input sensitivity
Aux In : 1V ± 3dB at 47kΩ
Scart In : 500mV ± 3dB at 47kΩ
Output sensitivity
Line Out (Left/Right) : 1V ± 1.5dB at 4.7kΩ
Scart Out (Left/Right) : 1V ± 1.5dB at 4.7kΩ

COMPACT DISC/VCD/DVD:

Video Decoding : MPEG-1/MPEG-2/MPEG-4/DivX 3.11, 4.x & 5.x
Video DAC : 12 Bits
Signal System : PAL / NTSC
Video Format : 4:3 / 16:9

CVBS Out [1)]
CVBS level : 1.0 ± 0.1V_{p-p}
Luminance S/N : >= 55dB

S-Video Out [1)]
Y level : 1.0 ± 0.1V_{p-p}
Y S/N : >= 60dB
C level (burst) : 286mV_{p-p} +1/-4 dB

RGB/YUV Out [1)]
Amplitude : 0.7 ± 0.1V_{p-p}
S/N : >= 60dB

[1)] Output terminals to be terminated with 75Ω

MEASUREMENT SETUP

Tuner FM

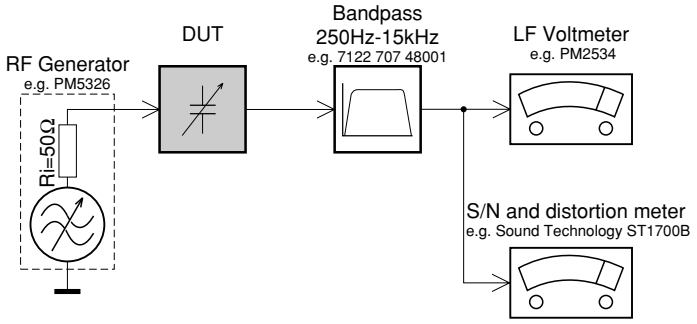

Use a bandpass filter to eliminate hum (50Hz, 100Hz) and disturbance from the pilottone (19kHz, 38kHz).

Tuner AM (MW,LW)

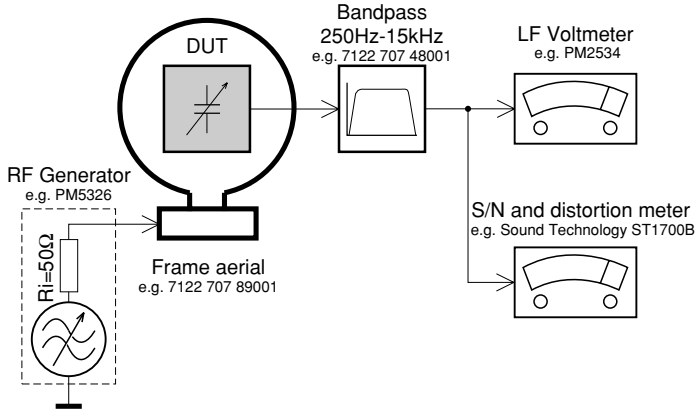

To avoid atmospheric interference all AM-measurements have to be carried out in a Faraday´s cage.
Use a bandpass filter (or at least a high pass filter with 250Hz) to eliminate hum (50Hz, 100Hz).

CD

Use Audio Signal Disc SBC429 4822 397 30184
(replaces test disc 3)

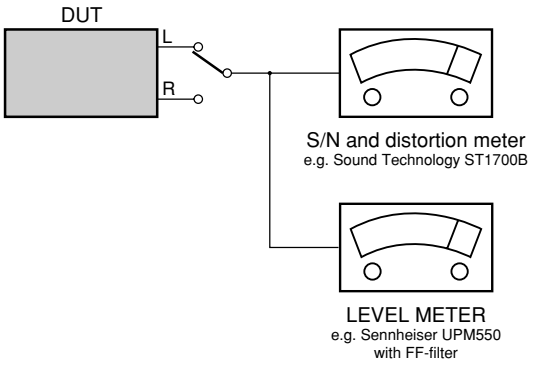

Recorder

Use Universal Test Cassette **CrO2** SBC419 4822 397 30069
or Universal Test Cassette **Fe** SBC420 4822 397 30071

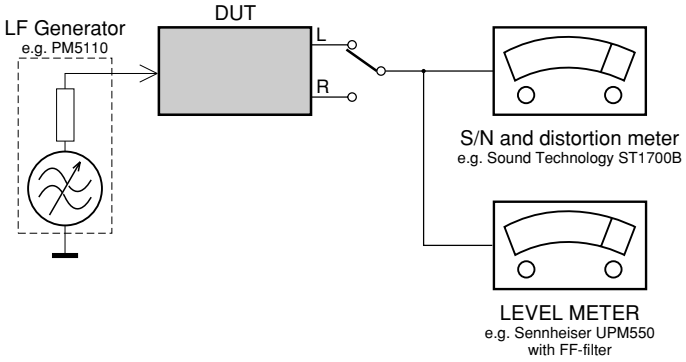

SERVICE AIDS

Service Tools:

Universal Torx driver holder 4822 395 91019
Torx bit T10 150mm 4822 395 50456
Torx driver set T6 - T20 ..... 4822 395 50145
Torx driver T10 extended 4822 395 50423

Compact Disc:

SBC426/426A Test disc 5 + 5A 4822 397 30096
SBC442 Audio Burn-in Test disc 1kHz 4822 397 30155
SBC429 Audio Signals disc 4822 397 30184
Dolby Pro-logic Test Disc 4822 395 10216

HANDLING CHIP COMPONENTS

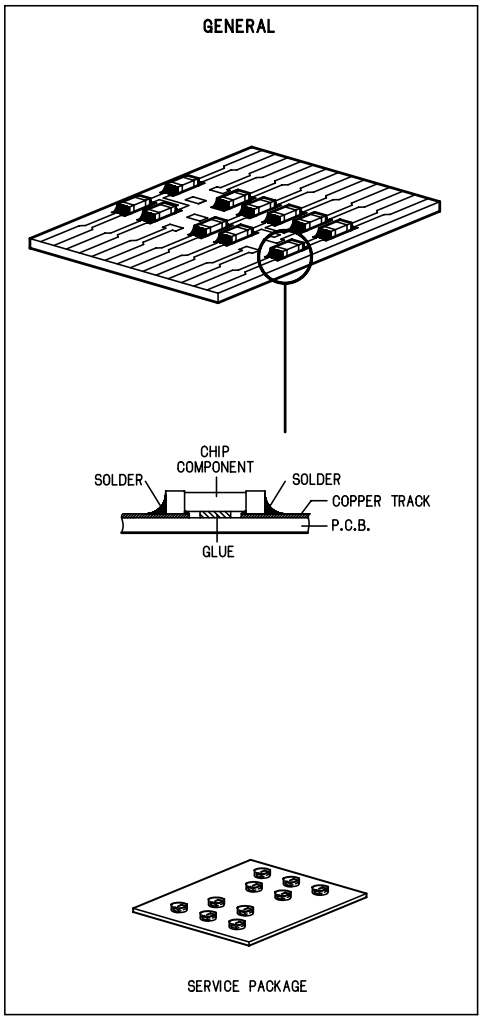

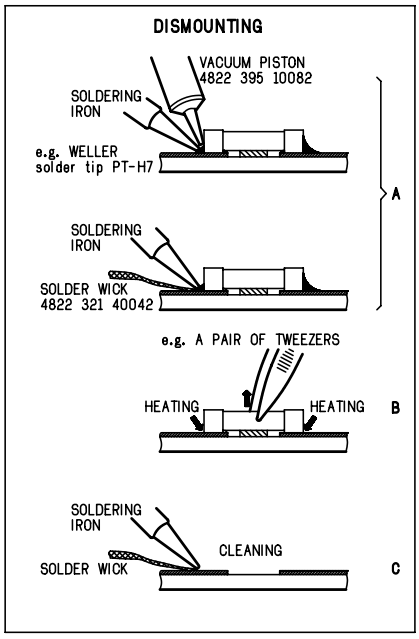

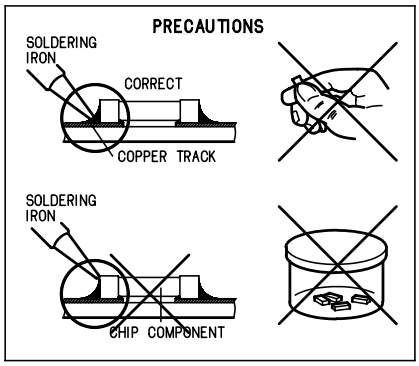

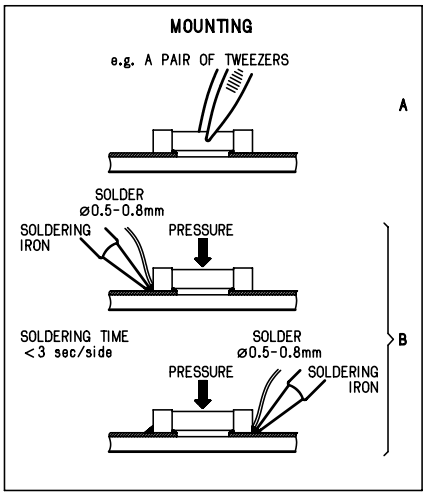

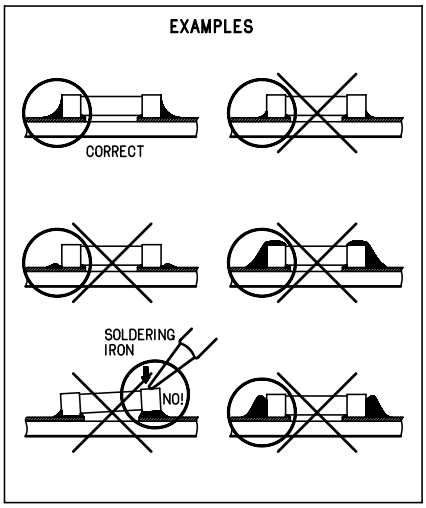

ESD

GB WARNING

All ICs and many other semi-conductors are susceptible to electrostatic discharges (ESD). Careless handling during repair can reduce life drastically.
When repairing, make sure that you are connected with the same potential as the mass of the set via a wrist wrap with resistance. Keep components and tools also at this potential.

NL WAARSCHUWING

Alle IC's en vele andere halfgeleiders zijn gevoelig voor electrostatische ontladingen (ESD). Onzorgvuldig behandelen tijdens reparatie kan de levensduur drastisch doen verminderen.
Zorg ervoor dat u tijdens reparatie via een polsband met weerstand verbonden bent met hetzelfde potentiaal als de massa van het apparaat.
Houd componenten en hulpmiddelen ook op ditzelfde potentiaal.

F ATTENTION

Tous les IC et beaucoup d'autres semi-conducteurs sont sensibles aux décharges statiques (ESD).
Leur longévité pourrait être considérablement écourtée par le fait qu'aucune précaution n'est prise à leur manipulation.
Lors de réparations, s'assurer de bien être relié au même potentiel que la masse de l'appareil et enfiler le bracelet serti d'une résistance de sécurité.
Veiller à ce que les composants ainsi que les outils que l'on utilise soient également à ce potentiel.

D WARNUNG

Alle ICs und viele andere Halbleiter sind empfindlich gegenüber elektrostatischen Entladungen (ESD).
Unsorgfältige Behandlung im Reparaturfall kan die Lebensdauer drastisch reduzieren.
Veranlassen Sie, dass Sie im Reparaturfall über ein Pulsarmband mit Widerstand verbunden sind mit dem gleichen Potential wie die Masse des Gerätes.
Bauteile und Hilfsmittel auch auf dieses gleiche Potential halten.

I AVVERTIMENTO

Tutti IC e parecchi semi-conduttori sono sensibili alle scariche statiche (ESD).
La loro longevità potrebbe essere fortemente ridatta in caso di non osservazione della più grande cauzione alla loro manipolazione.
Durante le riparazioni occorre quindi essere collegato allo stesso potenziale che quello della massa dell'apparecchio tramite un braccialetto a resistenza.
Assicurarsi che i componenti e anche gli utensili con quali si lavora siano anche a questo potenziale.

GB ESD PROTECTION EQUIPMENT:

Complete Kit ESD3 (small tablemat, wristband, connection box, extention cable and earth cable) 4822 310 10671
Wristband tester 4822 344 13999

GB

Safety regulations require that the set be restored to its original condition and that parts which are identical with those specified, be used

Safety components are marked by the symbol ⚠.

NL

Veiligheidsbepalingen vereisen, dat het apparaat bij reparatie in zijn oorspronkelijke toestand wordt teruggebracht en dat onderdelen, identiek aan de gespecificeerde, worden toegepast.

De Veiligheidsonderdelen zijn aangeduid met het symbool ⚠

F

Les normes de sécurité exigent que l'appareil soit remis à l'état d'origine et que soient utiliséés les piéces de rechange identiques à celles spécifiées.

Less composants de sécurité sont marqués ⚠

D

Bei jeder Reparatur sind die geltenden Sicherheitsvorschriften zu beachten. Der Original zustand des Geräts darf nicht verändert werden; für Reparaturen sind Original-Ersatzteile zu verwenden.

Sicherheitsbauteile sind durch das Symbol ⚠ markiert.

I

Le norme di sicurezza esigono che l'apparecchio venga rimesso nelle condizioni originali e che siano utilizzati i pezzi di ricambio identici a quelli specificati.

Componenty di sicurezza sono marcati con ⚠

GB

After servicing and before returning set to customer perform a leakage current measurement test from all exposed metal parts to earth ground to assure no shock hazard exist. The leakage current must not exceed 0.5mA.

CLASS 1
LASER PRODUCT

GB Warning !

Invisible laser radiation when open.
Avoid direct exposure to beam.

S Varning !

Osynlig laserstrålning när apparaten är öppnad och spärren är urkopplad. Betrakta ej strålen.

SF Varoitus !

Avatussa laitteessa ja suojalukituksen ohitettaessa olet alttiina näkymättömälle laserisäteilylle. Älä katso säteeseen!

DK Advarse !

Usynlig laserstråling ved åbning når sikkerhedsafbrydere er ude af funktion. Undgå udsaettelse for stråling.

F

"Pour votre sécurité, ces documents doivent être utilisés par des spécialistes agréés, seuls habilités à réparer votre appareil en panne".

DISMANTLING INSTRUCTIONS

Dismantling of the DVD Loader

1) The tray can be manually open by inserting a minus screw driver and push the lever in the direction as shown in Figure 1 to unlock the tray before sliding it out.

2) Slide out the tray and remove the Cover Tray (pos 110) as shown in Figure 2.

3) Loosen 2 screws each to remove the Panel Cover Left (pos 231) and Panel Cover Right (pos 232).

4) Loosen 3 screws to remove the Front Top (pos 240).
   - 1 screw each on the left & right side (pos 272)
   - 1 screw at the bottom (pos 268)

5) Loosen 4 screws G (see Figure 6) to remove the DVD Loader (pos 1602).

Figure 1

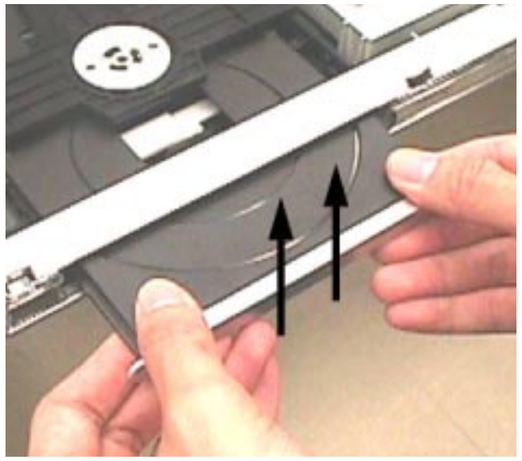

Figure 2

Dismantling of the Front Key Board

1) Loosen 4 screws C (see Figure 3) to remove the Bracket Support Control (pos 130) and the Front Key Board (pos 1401).

2) Loosen 6 screws D (see Figure 4) to remove the Front Key Board (pos 1401) from the Bracket Support Control (pos 130).

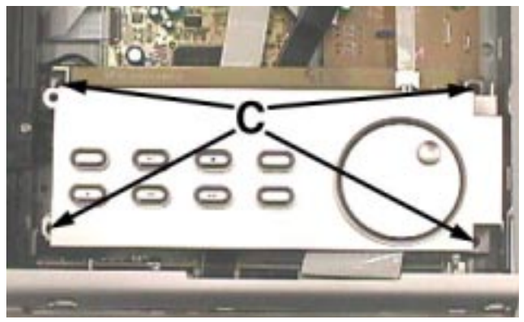

Figure 3

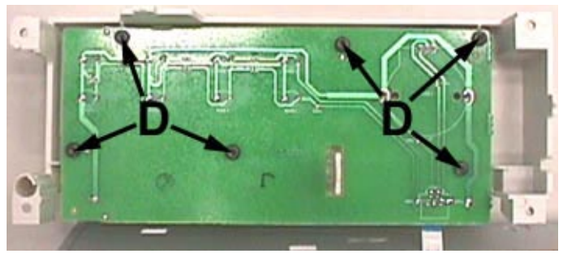

Figure 4

Dismantling of the Tuner Module, AV Board, Front Board and SD6.3 ST AV2 Board

1) Loosen 2 screws A (see Figure 5) to remove the Tuner Module (pos 1801).

2) Loosen 9 screws B (see Figure 5) and 2 scews H (see Figure 6) to remove the AV Board (pos 1501).

3) Loosen 2 screws E (see Figure 6) to remove the Front Board (pos 1201).

4) Loosen 2 screws F (see Figure 6) to remove the SD6.3 ST AV2 Board (1601).

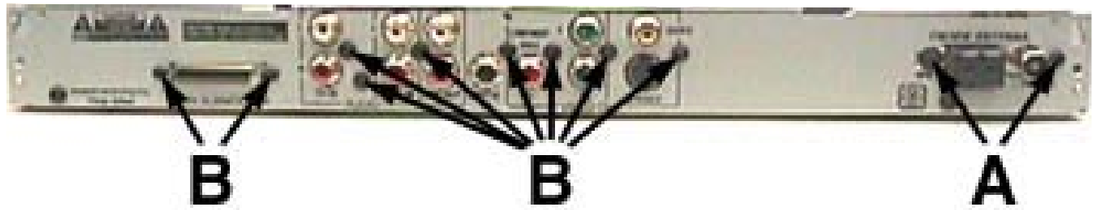

Figure 5

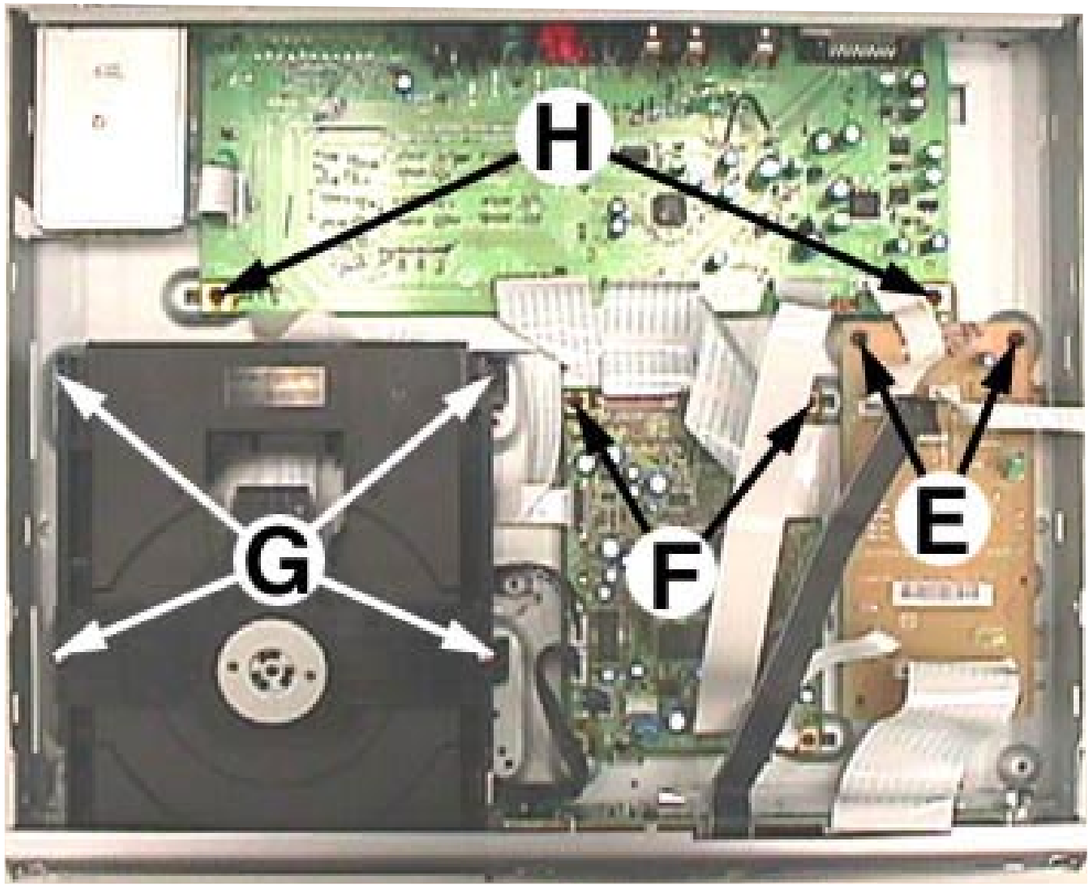

Figure 6

2-2

SERVICE POSITIONS

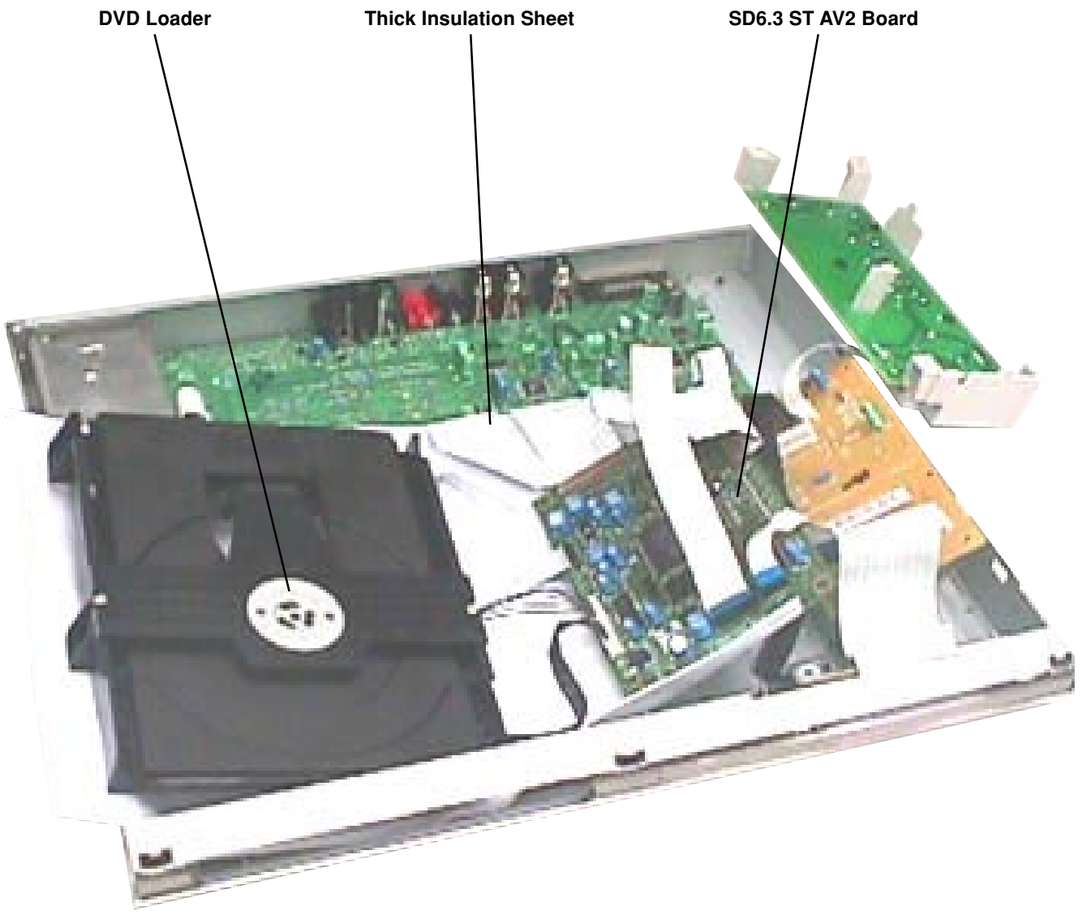

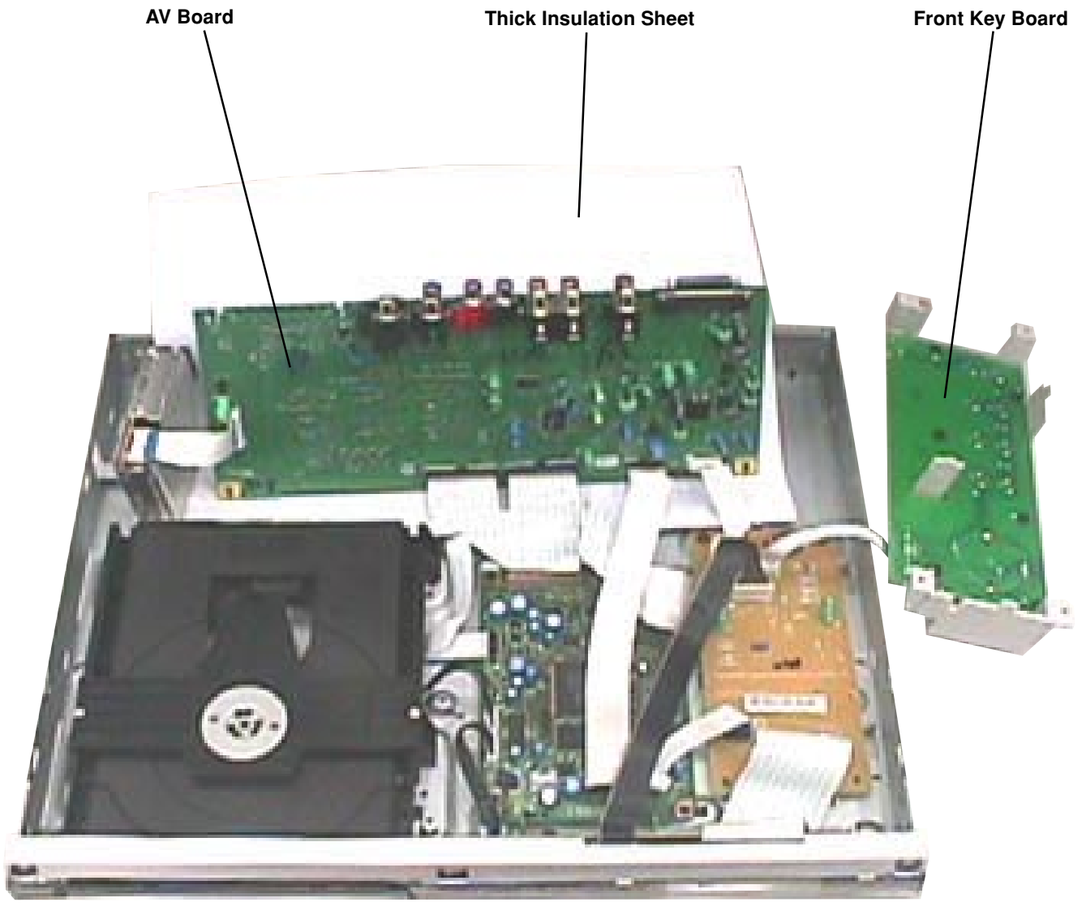

SERVICE TEST PROGRAM

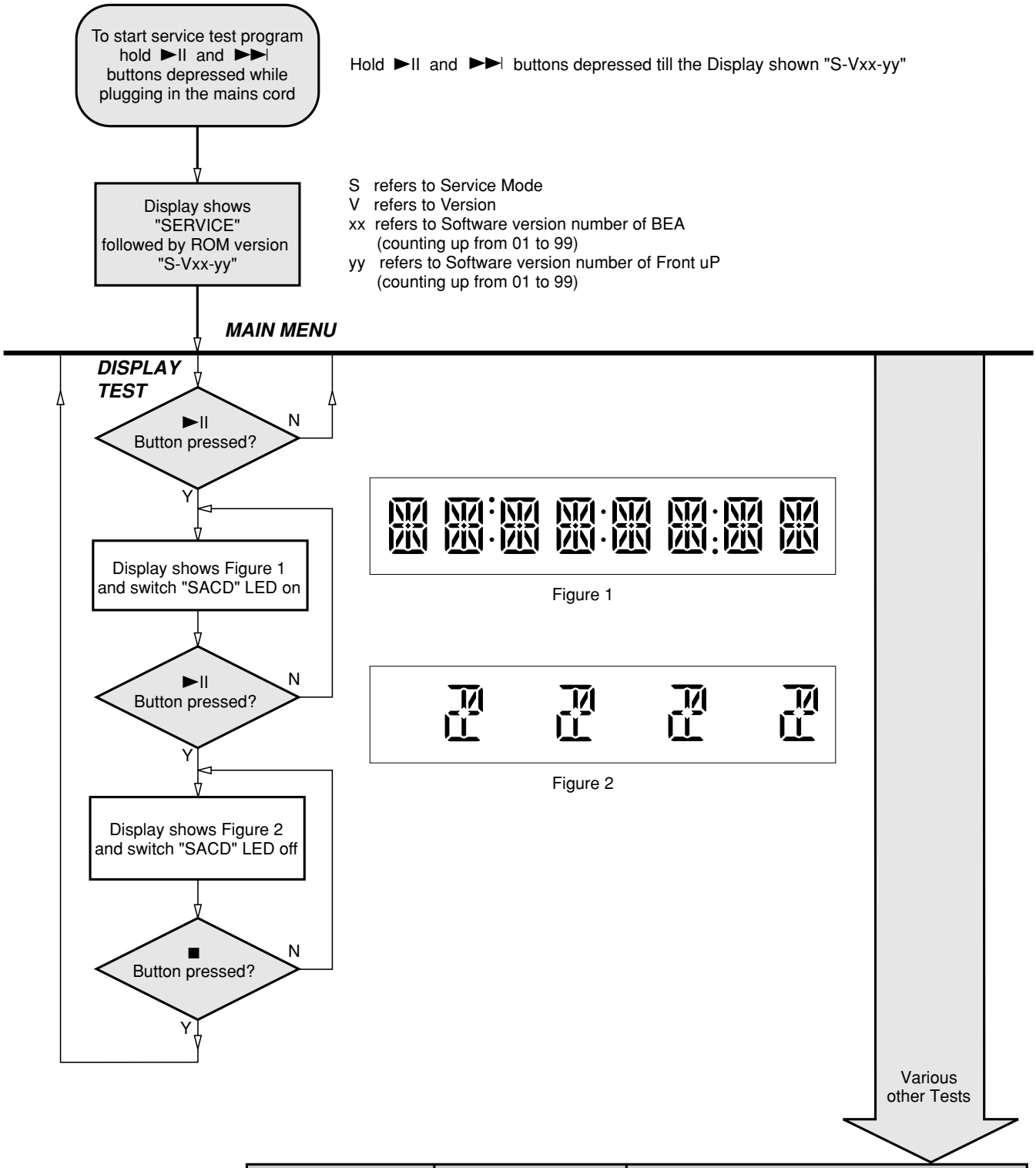

TEST	Activated with	ACTION
EEPROM FORMAT TEST	I◄◄ I◄◄ to Exit	Load default data. Display shows "NEW". ***Caution!*** ***All presets from the customer will be lost!!***
ROTARY ENCODER TEST	Volume Knob	Display shows value for 2 seconds. Volume values increases or decreases in steps of 1 until 0 (VOL MIN) or 40 (VOL MAX) is reached.
LEAVE SERVICE TEST PROGRAM	Disconnect mains cord	

Reprogramming of DVD version Matrix

After repair, the customer setting and region code may be lost. Reprogramming will put the set back in the state in which it has left the factory, ie. with the default setting and the allowed region code.

Model	Region	Region Code	TV Type
LX8300SA/01	Europe	2	PAL
LX8300SA/05	Europe	2	PAL
LX8320SA/69	AP	3	PAL
LX8300SA/04	Russia	5	PAL
LX8320SA/93	China	6	PAL
LX8500W/01	Europe	2	PAL
LX8500W/04	Russia	5	PAL
LX8500W/69	AP	3	PAL
LX8500W/93	China	6	PAL

To reprogram do as follows:

1) Power up the set and select **DISC** source.
2) Open tray by press "OPEN/CLOSE" button on the set or press and hold "STOP" button on the RC.
3) Press the following buttons on the Remote Control:
   <9> <9> <9> <9> <AUDIO> <1> ..... for LX8300SA/01
   <9> <9> <9> <9> <AUDIO> <2> ..... for LX8300SA/05
   <9> <9> <9> <9> <AUDIO> <3> ..... for LX8320SA/69
   <9> <9> <9> <9> <AUDIO> <4> ..... for LX8300SA/04
   <9> <9> <9> <9> <AUDIO> <5> ..... for LX8320SA/93
   <9> <9> <9> <9> <AUDIO> <6> .....for LX8500W/01
   <9> <9> <9> <9> <AUDIO> <7> .....for LX8500W/04
   <9> <9> <9> <9> <AUDIO> <8> .....for LX8500W/69
   <9> <9> <9> <9> <AUDIO> <9> .....for LX8500W/93
4) The display shows '**YYYY-ZZ**' and the tray will close.
   YYYY = model number (eg. 8300, 8500, etc.)
   ZZ = slash stroke version (eg. 01, 69, etc.)

Procedure for check Software version

1) Power up the set and select **DISC** source.
2) Open tray by press "OPEN/CLOSE" button on the set or press and hold "STOP" button on the RC.
3) Press "DISPLAY" button on the Remote control.
4) The TV screen will shows:

SD6.3 Vxx YYYY-ZZ A BB
SERVO: nnnnnnnn REG:A

xx = version number
YYYY = model number (eg. 8300, 8500, etc.)
ZZ = slash stroke version (eg. 01, 69, etc.)
A = region code
BB = Front uP software version number
nnnnnnnn = servo version number

Procedure to upgrade software

1) Power up the set and select **DISC** source.
2) Open tray by press "OPEN/CLOSE" button on the set or press and hold "STOP" button on the RC.
3) Place upgrade CD-ROM onto tray and close.
4) The set will response and display the following:
   - **LOAD** [After the disc is read, the tray will open for you to remove the disc]
   - **ERASE** [Erasing disc]
   - **WRITE** [Writing disc]
   - **ERROR** [if upgrade is unsuccessful]
   - **UPG END** [if upgrade is successful]
   - **DISC->CLOSE->LOAD** [Tray will close indicating that the upgrade process is completed]
5) The whole process should not take more than 5 minutes.

Caution: Do not unplug the set until upgrade is completed.

Trade Mode

Trade mode is a feature that will block all set keys when enabled. It is for dealers to prevent customers from removing disc, changing source etc using the set keys. Rotary and Remote Control (RC) keys are still allowed in Trade mode.

To activate Trade Mode:

1) Power up the set and select **DISC** source.
2) Open tray by press "OPEN/CLOSE" button on the set or press and hold "STOP" button on the RC.
3) Then press buttons <2> <5> <9> on the RC.
4) The display shows '**TRA ON**' and the tray will close. Trade Mode is now enabled.

To deactivate Trade Mode:

1) Power up the set and select **DISC** source.
2) Open tray by press and hold "STOP"button on the RC.
3) Then press buttons <2> <5> <9> on the RC.
4) The display shows '**TRA OFF**' and the tray will close. Trade Mode is now disabled.

Procedure to change Tuner Grid (not for all versions)

1) By holding "SOURCE" and "PREV" buttons depressed while switching on the mains supply, the tuning grid frequency is toggled between 9kHz and 10kHz.
2) Hold the "SOURCE" and "PREV" buttons depressed until the display shown the new tuning grid '**GRID 9**' or '**GRID 10**'.

Note: Repeating the same action will toggle back to its previous tuning grid setting.

4-1

SET BLOCK DIAGRAM

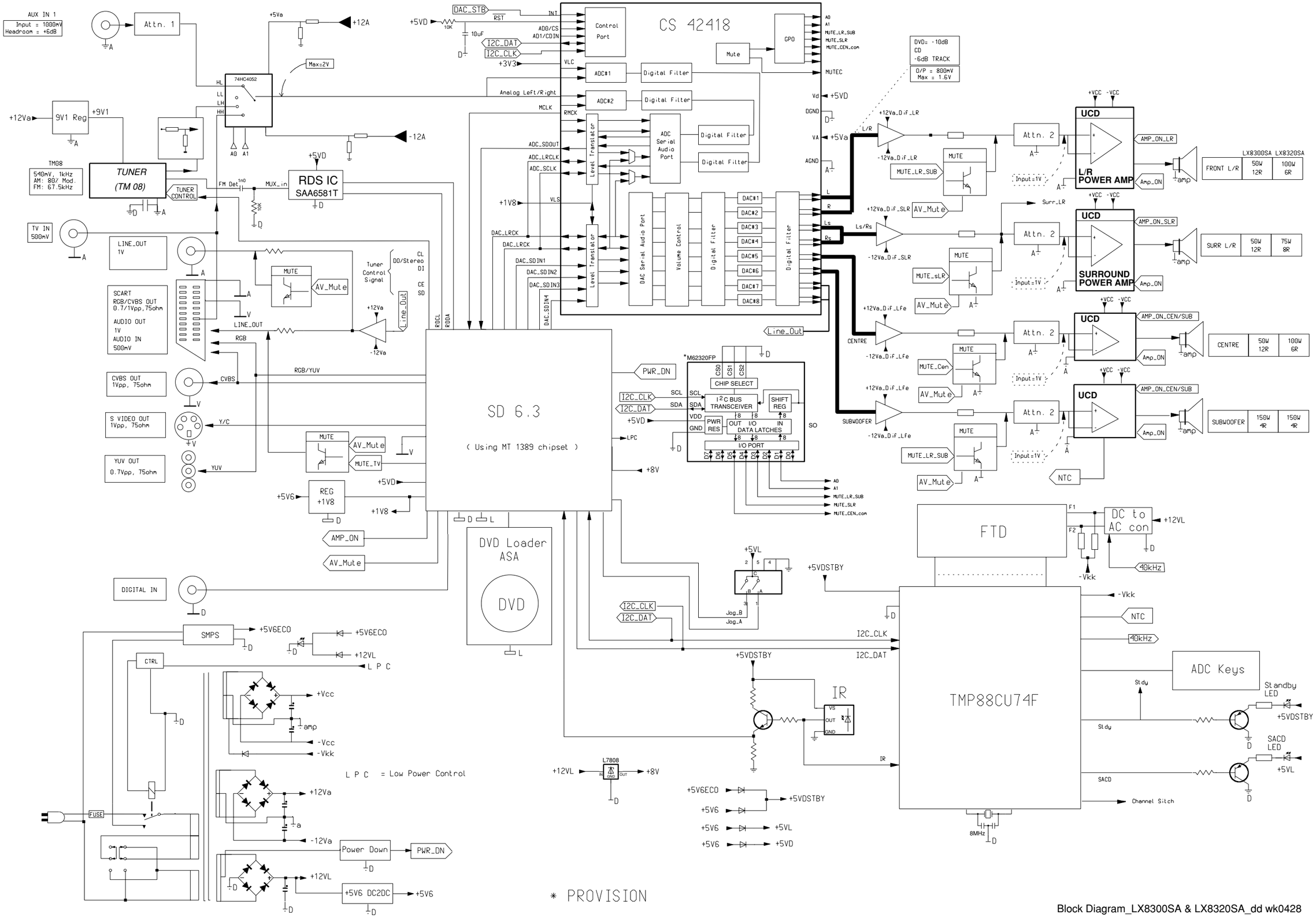

Block Diagram_LX8300SA & LX8320SA_dd wk0428

5-1

SET WIRING DIAGRAM

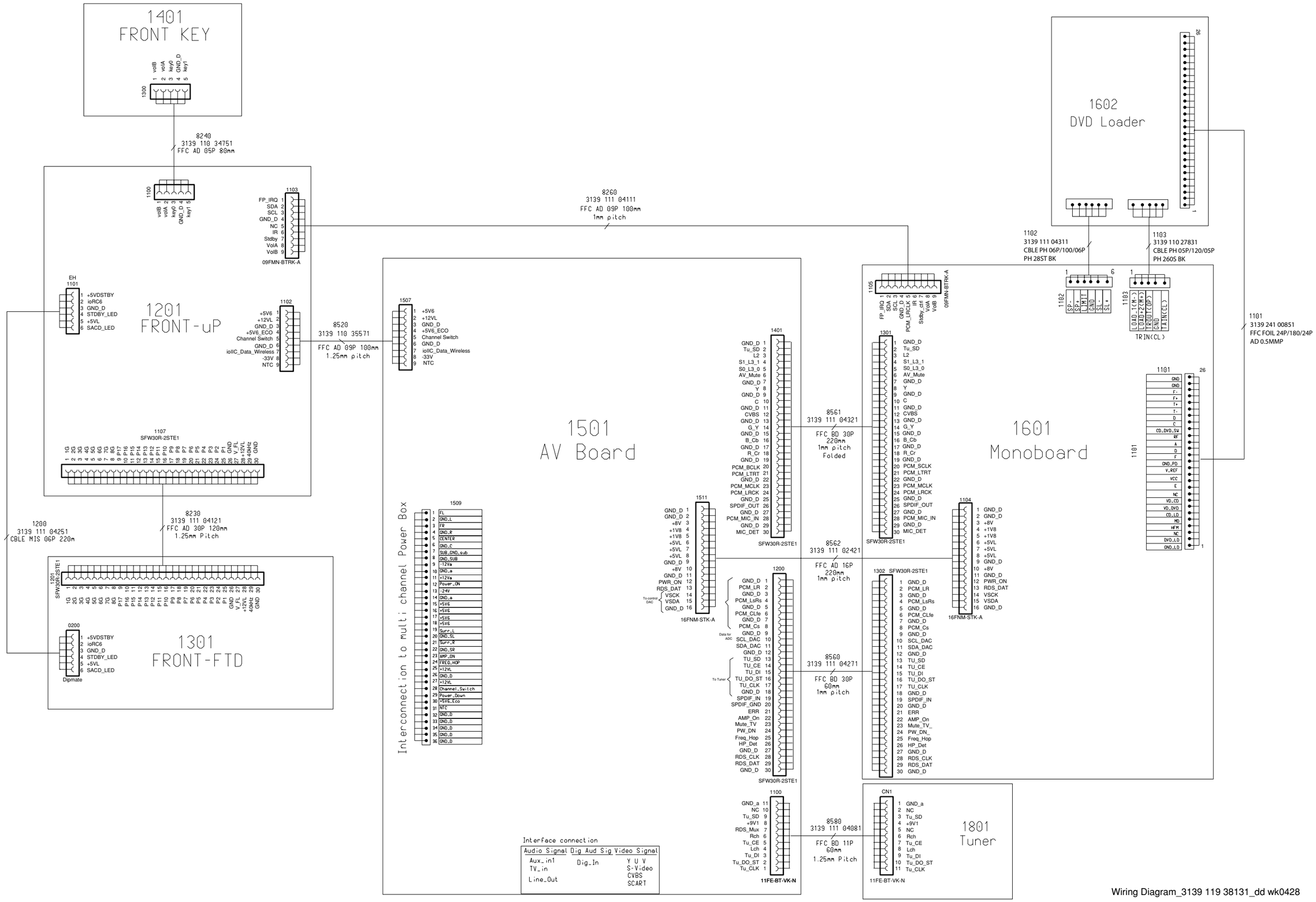

PANEL FRONT BOARDS

TABLE OF CONTENTS

FTD Display Pin Connection 6-1
Front Board - Component & Chip Layout 6-2
Front Board - Circuit Diagram 6-3
IR/FTD/LED Board - Component & Chip Layout 6-4
IR/FTD/LED Board - Circuit Diagram 6-5
Front Key Board - Component & Chip Layout 6-6
Front Key Board - Circuit Diagram 6-7
Electrical parts list 6-7

FTD DISPLAY PIN CONNECTION

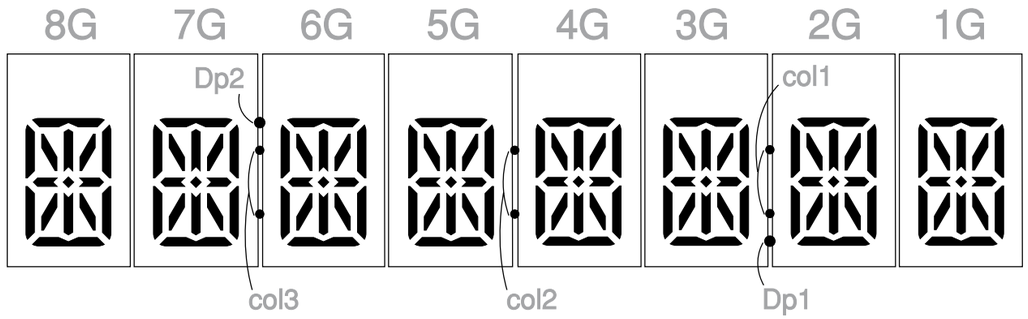

(1G - 8G)

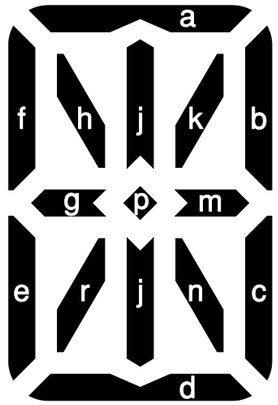

	8G	7G	6G	5G	4G	3G	2G	1G
P1	a	a	a	a	a	a	a	a
P2	k	k	k	k	k	k	k	k
P3	j	j	j	j	j	j	j	j
P4	h	h	h	h	h	h	h	h
P5	b	b	b	b	b	b	b	b
P6	f	f	f	f	f	f	f	f
P7	m	m	m	m	m	m	m	m
P8	p	p	p	p	p	p	p	p
P9	g	g	g	g	g	g	g	g
P10	c	c	c	c	c	c	c	c
P11	e	e	e	e	e	e	e	e
P12	n	n	n	n	n	n	n	n
P13	r	r	r	r	r	r	r	r
P14	-	col3		col2		col1		-
P15	d	d	d	d	d	d	d	d
P16	-	-	-	-	-	-	-	-
P17	-	Dp2		-	-	Dp1		-

FRONT BOARD - COMPONENT LAYOUT

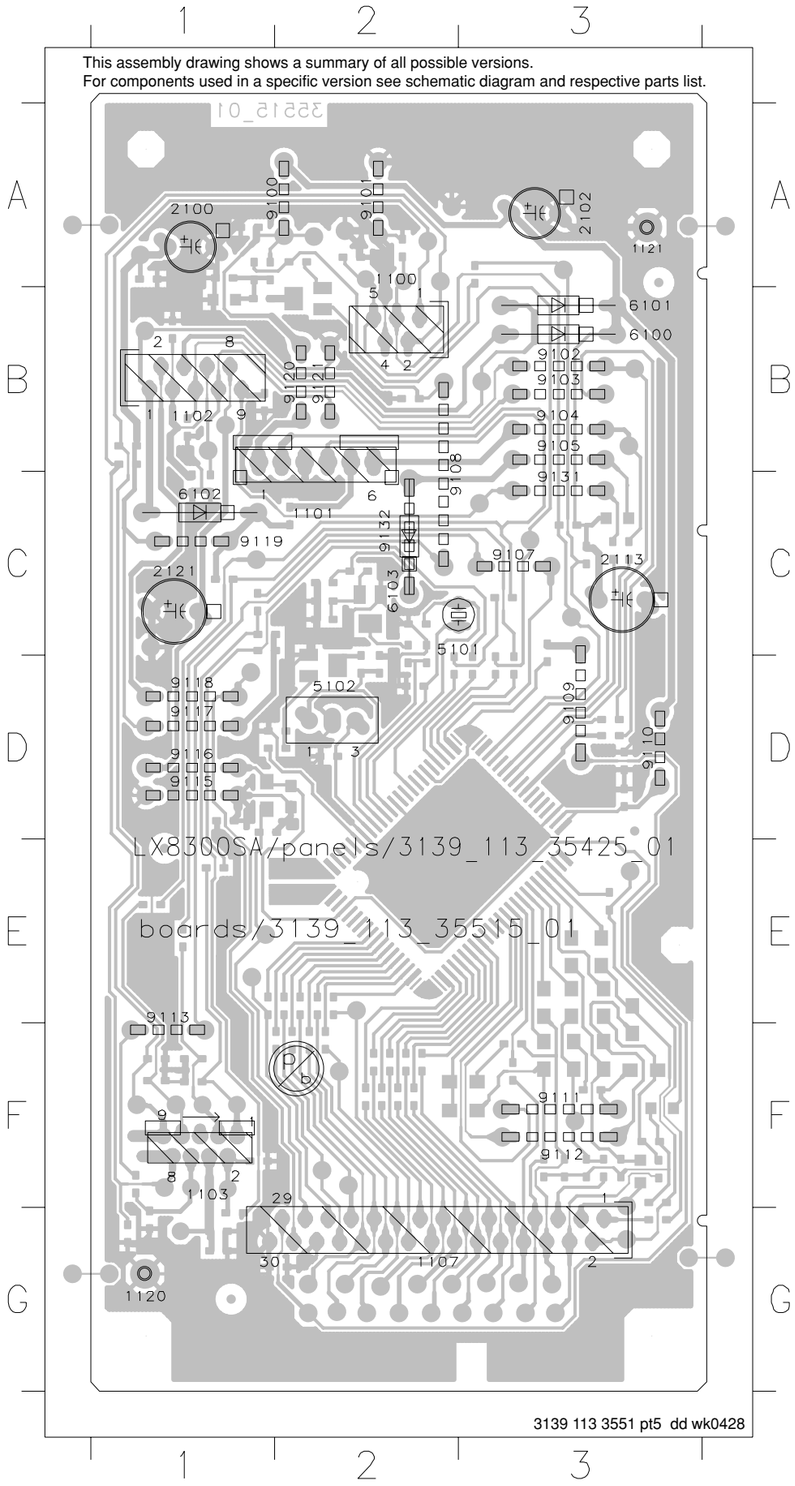

1100	A2
1101	C2
1102	B1
1103	F1
1107	G2
1120	G1
1121	A3
2100	A1
2102	A3
2113	C3
2121	C1
5101	C2
5102	D2
6100	B3
6101	B3
6102	C1
6103	C2
9100	A1
9101	A2
9102	B3
9103	B3
9104	B3
9105	B3
9107	C3
9108	C2
9109	D3
9110	D3
9111	F3
9112	F3
9113	E1
9115	D1
9116	D1
9117	D1
9118	D1
9119	C1
9120	B2
9121	B2
9131	C3
9132	C2

FRONT BOARD - CHIP LAYOUT

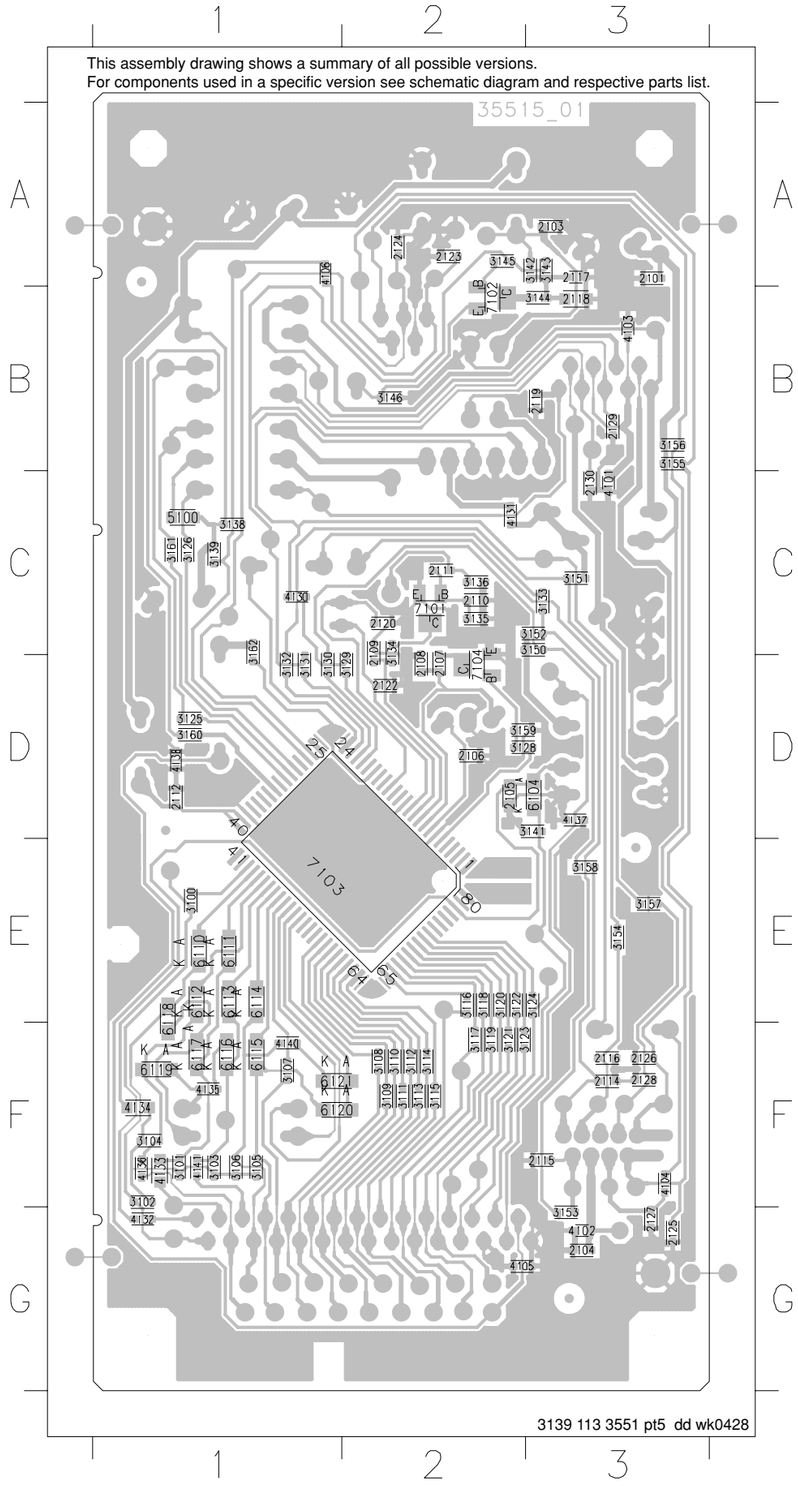

2101	A3	3150	C3
2103	A3	3151	C3
2104	G3	3152	C3
2105	D2	3153	G3
2106	D2	3154	E3
2107	D2	3155	B3
2108	D2	3156	B3
2109	C2	3157	E3
2110	C2	3158	E3
2111	C2	3159	D2
2112	D1	3160	D1
2114	F3	3161	C1
2115	F3	3162	C1
2116	F3	4101	C3
2117	A3	4102	G3
2118	B3	4103	B3
2119	B3	4104	F3
2120	C2	4105	G2
2122	D2	4106	A1
2123	A2	4130	C1
2124	A2	4131	C2
2125	G3	4132	G1
2126	F3	4133	F1
2127	G3	4134	F1
2128	F3	4135	F1
2129	B3	4136	F1
2130	C3	4137	D3
3100	E1	4138	D1
3101	F1	4140	F1
3102	F1	4141	F1
3103	F1	5100	C1
3104	F1	6104	D3
3105	F1	6110	E1
3106	F1	6111	E1
3107	F1	6112	E1
3108	F2	6113	E1
3109	F2	6114	E1
3110	F2	6115	F1
3111	F2	6116	F1
3112	F2	6117	F1
3113	F2	6118	E1
3114	F2	6119	F1
3115	F2	6120	F1
3116	E2	6121	F1
3117	F2	7101	C2
3118	E2	7102	B2
3119	F2	7103	E1
3120	E2	7104	D2
3121	F2		
3122	E2		
3123	F2		
3124	E3		
3125	D1		
3126	C1		
3128	D2		
3129	D2		
3130	D1		
3131	D1		
3132	D1		
3133	C3		
3134	C2		
3135	C2		
3136	C2		
3138	C1		
3139	C1		
3141	D3		
3142	A3		
3143	A3		
3144	B3		
3145	A2		
3146	B2		

6-3

FRONT BOARD - CIRCUIT DIAGRAM

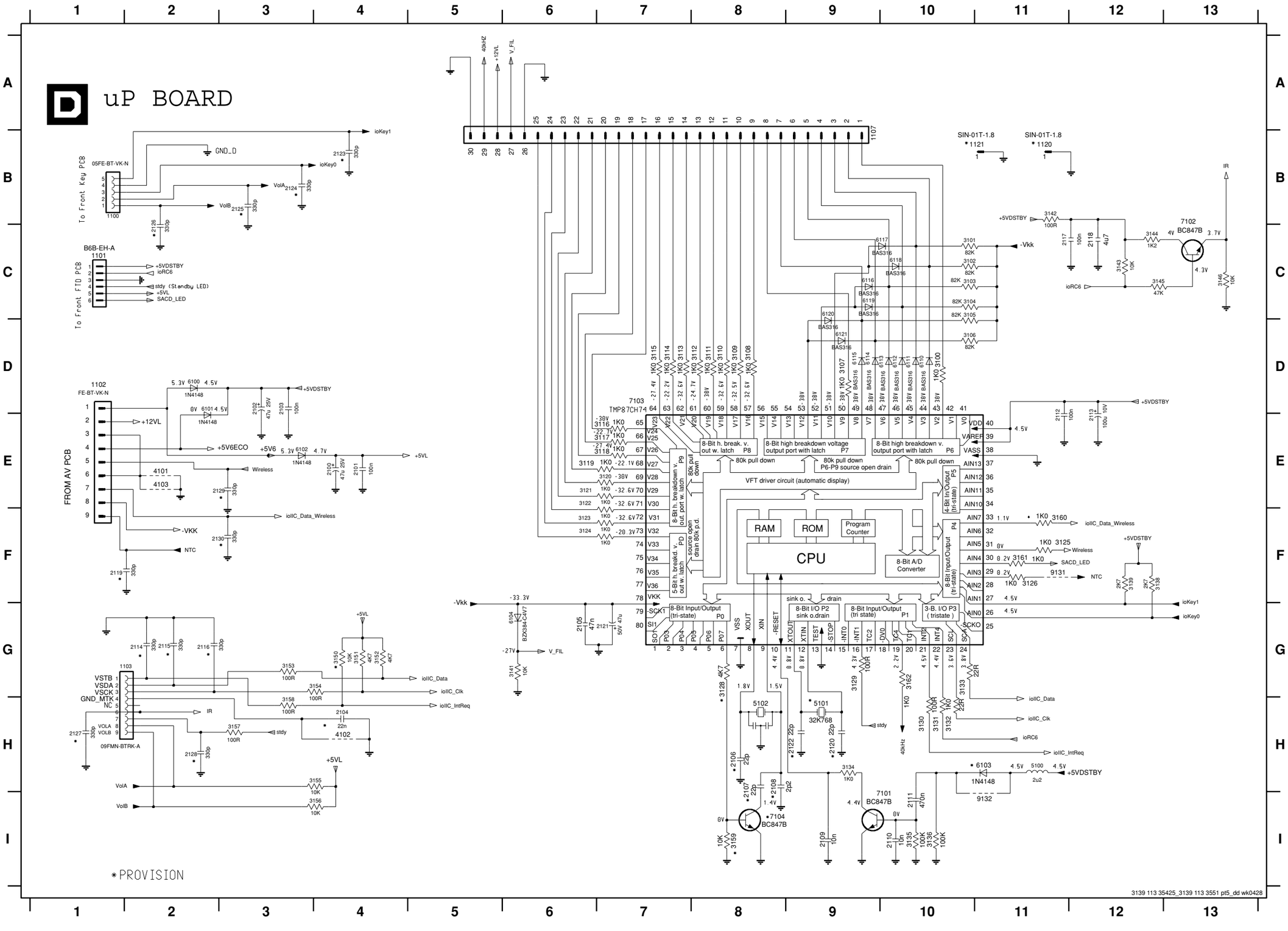

1100 B1	6114 D9
1101 C1	6115 D9
1102 D1	6116 C9
1103 G2	6117 C10
1107 A9	6118 C10
1120 B11	6119 C9
1121 B11	6120 C9
2100 E4	6121 D9
2101 E4	7101 I10
2102 D3	7102 B13
2103 D3	7103 D7
2104 H4	7104 I8
2105 G6	9131 F11
2106 H8	9132 I11
2107 H8	
2108 H8	
2109 I9	
2110 I10	
2111 I10	
2112 E11	
2113 E12	
2114 G2	
2115 G2	
2116 G2	
2117 C11	
2118 C12	
2119 F1	
2120 H9	
2121 G7	
2122 H9	
2123 B4	
2124 B3	
2125 B3	
2126 C2	
2127 H1	
2128 H2	
2129 E2	
2130 F2	
3100 D10	
3101 C10	
3102 C10	
3103 C10	
3104 C10	
3105 C10	
3106 D10	
3107 D9	
3108 D8	
3109 D8	
3110 D8	
3111 D8	
3112 D8	
3113 D7	
3114 D7	
3115 D7	
3116 E7	
3117 E7	
3118 E7	
3119 E6	
3120 E7	
3121 E6	
3122 E6	
3123 F6	
3124 F6	
3125 F11	
3126 F11	
3128 G8	
3129 G9	
3130 H10	
3131 H10	
3132 H10	
3133 G10	
3134 H9	
3135 I10	
3136 I10	
3138 F12	
3139 F12	
3141 G6	
3142 B11	
3143 C12	
3144 C12	
3145 C12	
3146 C13	
3150 G4	
3151 G4	
3152 G4	
3153 G3	
3154 G4	
3155 H4	
3156 I4	
3157 H3	
3158 H3	
3159 I8	
3160 F11	
3161 F11	
3162 G10	
4101 E2	
4102 H4	
4103 E2	
5100 H11	
5101 H9	
5102 H8	
6100 D2	
6101 D2	
6102 E3	
6103 H11	
6104 G6	
6110 D10	
6111 D10	
6112 D10	
6113 D9	

3139 113 35425_3139 113 3551 pt5_dd wk0428

6-4

IR/FTD/LED BOARD - COMPONENT LAYOUT

200 A4 1201 A7 1202 A5 2204 A3 2205 A4 2206 A4 6200 A2 6201 A3 7200 A2

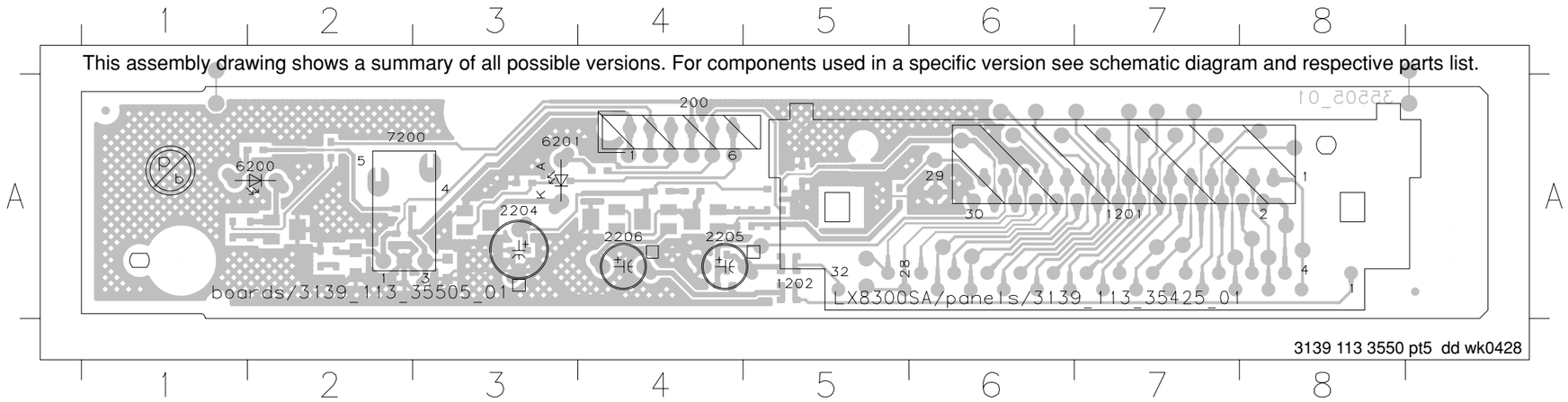

IR/FTD/LED BOARD - CHIP LAYOUT

2200 A6 2201 A6 2202 A7 2203 A6 2207 A4 3200 A7 3201 A7 3202 A7 3203 A8 3204 A6 3205 A5 3206 A5 3207 A5 3208 A5 3209 A4 3210 A4 3211 A5 3212 A4 3213 A4 3214 A4 3215 A4 3216 A5 3217 A7 3218 A6 4200 A7 4201 A7 4202 A4 4203 A4 4204 A4 6202 A7 7201 A7 7202 A6 7203 A5 7204 A5 7205 A5

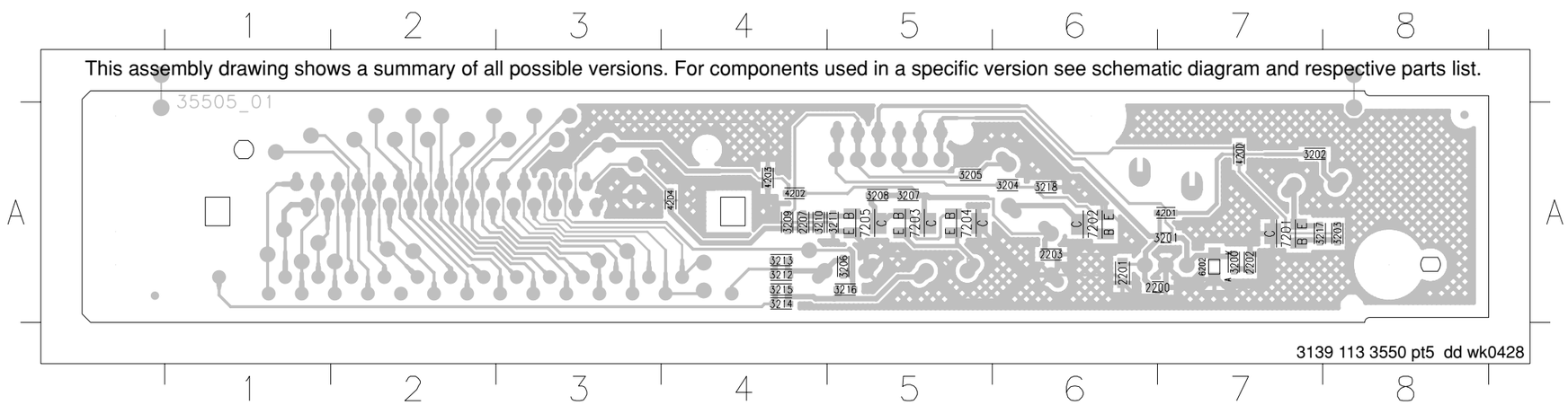

6-5

IR/FTD/LED BOARD - CIRCUIT DIAGRAM

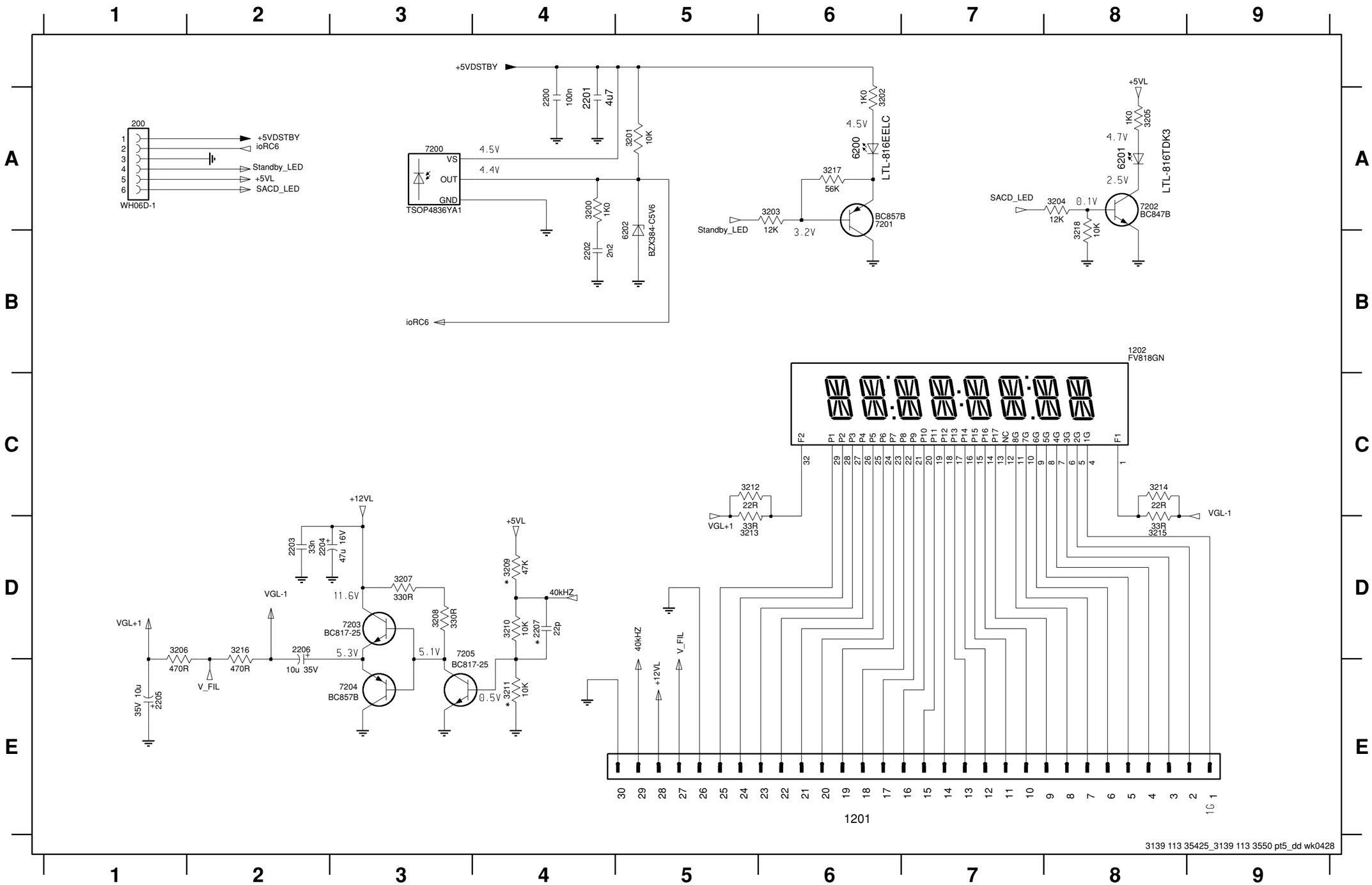

3139 113 35425_3139 113 3550 pt5_dd wk0428

200	A1
1201	E6
1202	B8
2200	A4
2201	A4
2202	B4
2203	D2
2204	D2
2205	E1
2206	D2
2207	D4
3200	A4
3201	A5
3202	A6
3203	A6
3204	A8
3205	A8
3206	D1
3207	D3
3208	D3
3209	D4
3210	D4
3211	E4
3212	C5
3213	D5
3214	C8
3215	D8
3216	D2
3217	A6
3218	B8
6200	A6
6201	A8
6202	B5
7200	A3
7201	A6
7202	A8
7203	D3
7204	E3
7205	D4

6-6

FRONT KEY BOARD - COMPONENT LAYOUT

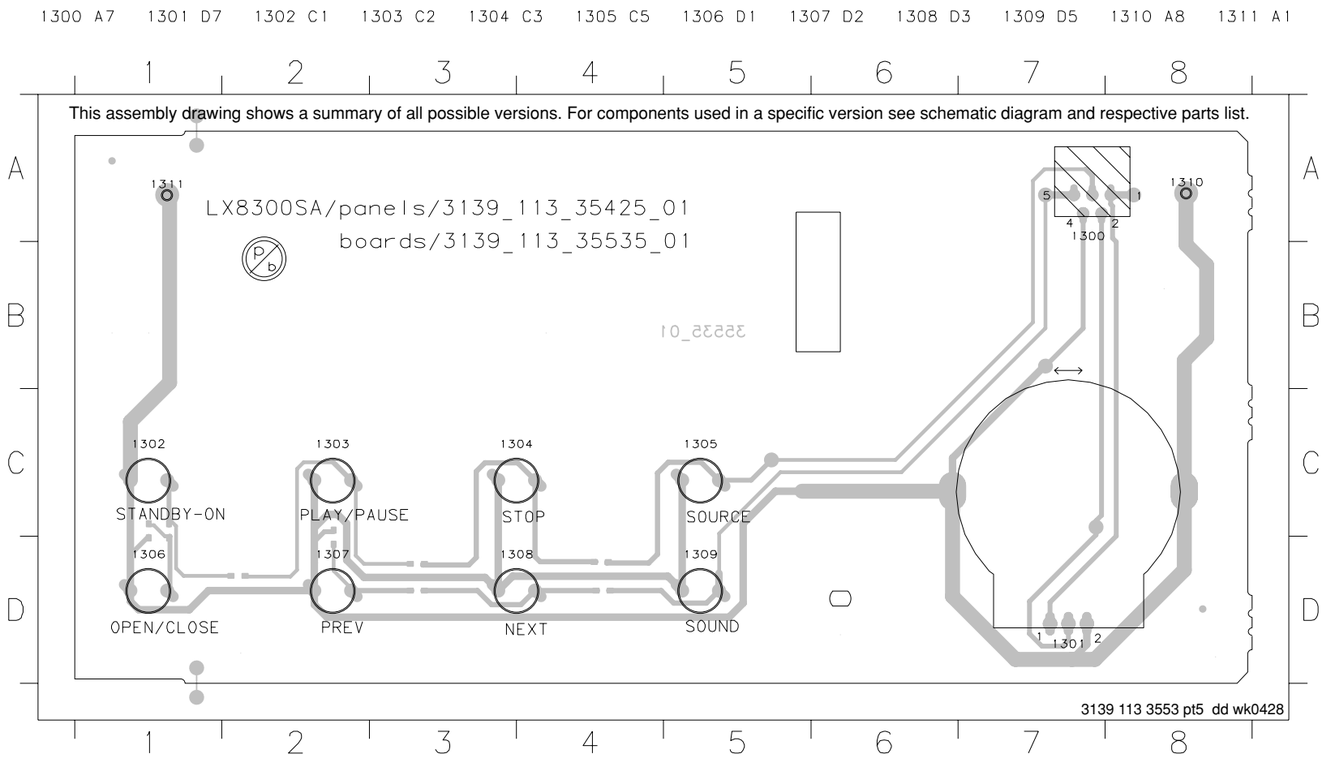

FRONT KEY BOARD - CHIP LAYOUT

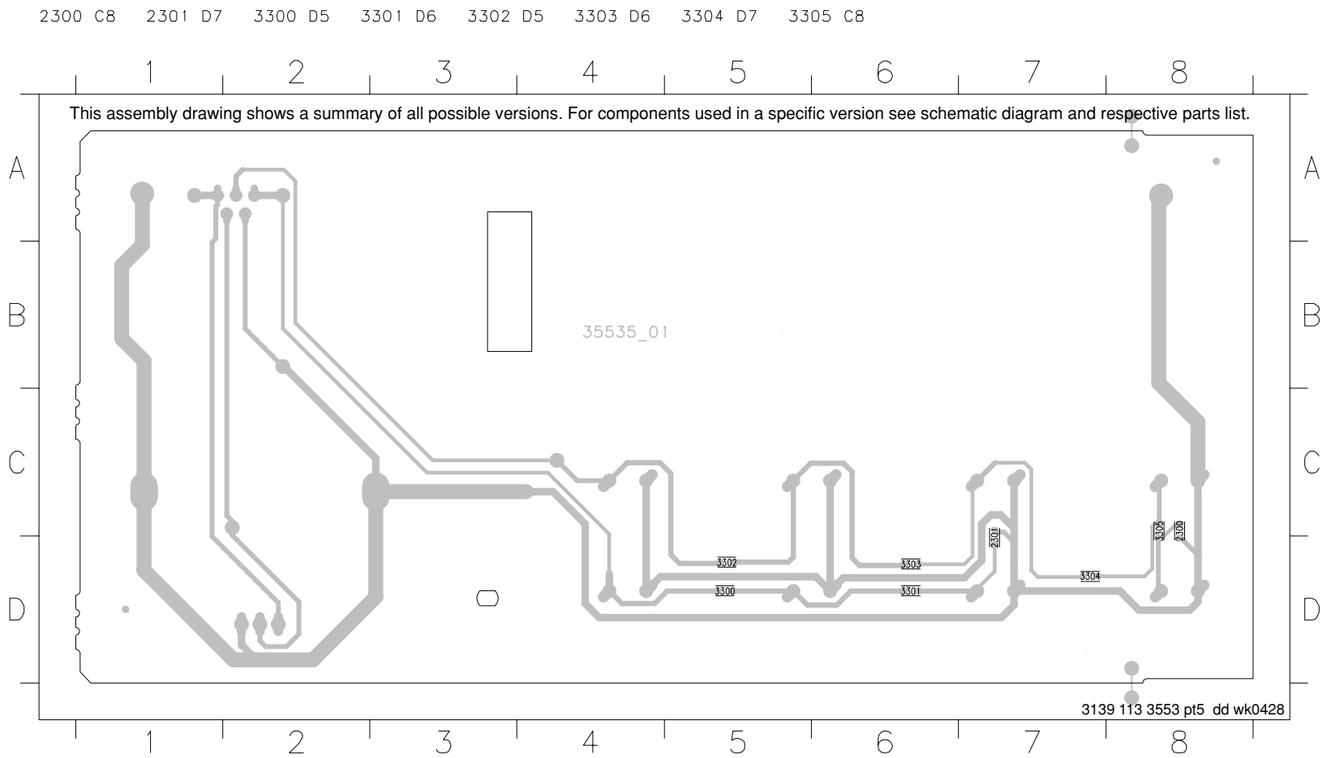

FRONT KEY BOARD - CIRCUIT DIAGRAM

1300 A3	1302 B1	1304 B2	1306 B1	1308 A1	1310 C1	2300 B1	3300 A2	3302 B2	3304 B2
1301 C2	1303 B2	1305 B3	1307 A1	1309 A2	1311 D1	2301 A1	3301 A1	3303 B2	3305 B1

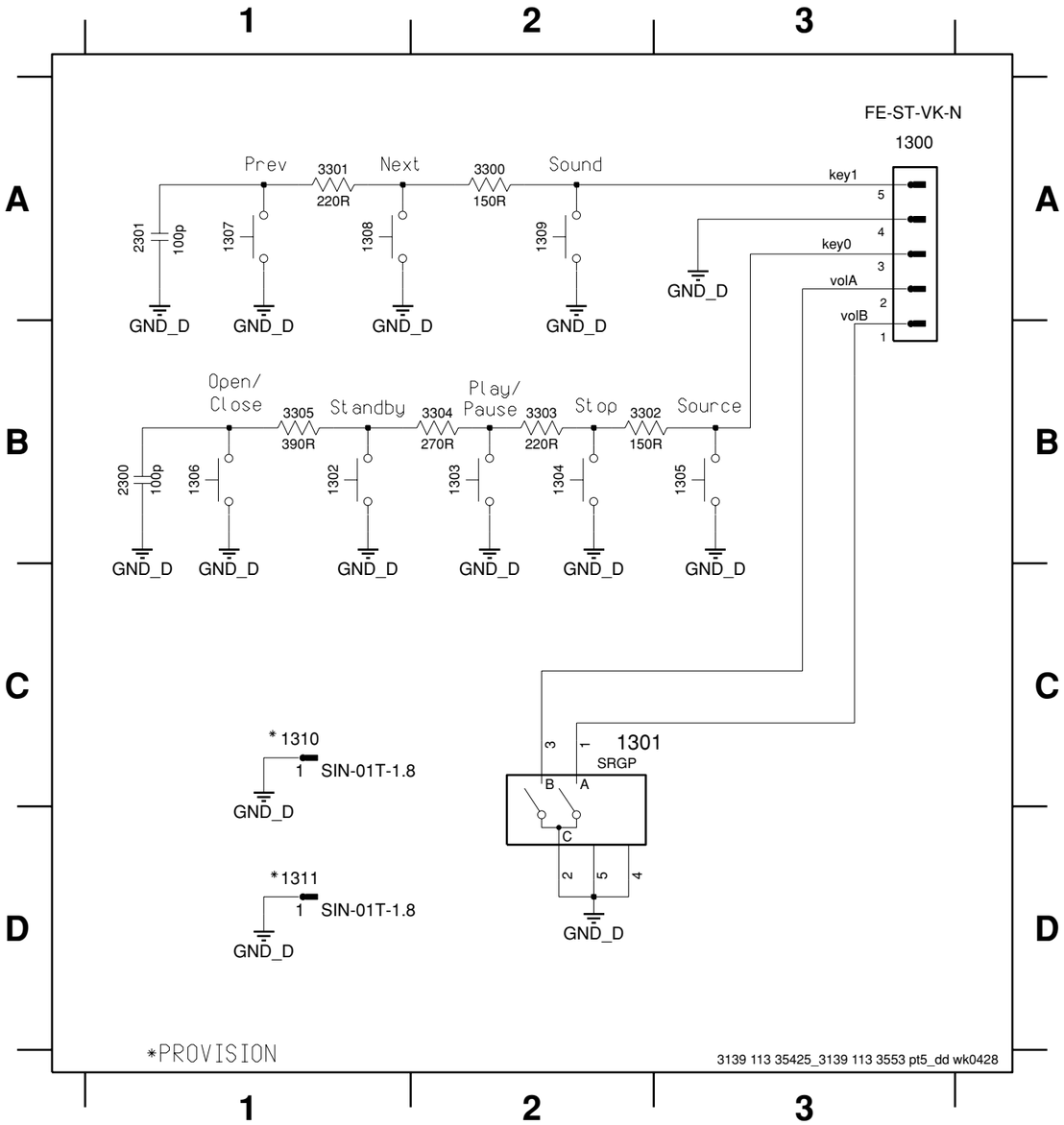

ELECTRICAL PARTS LIST - FRONT BOARD

MISCELLANEOUS

1100	4822 265 31205	FLEX CONNECTOR 5P
1102	2422 025 14518	FLEX CONNECTOR 9P
1103	2422 025 16586	FLEX CONNECTOR 9P
1103	2422 025 05587	FLEX CONNECTOR 9P
1107	2422 025 17411	FLEX CONNECTOR 30P

COILS & FILTERS

5100	4822 157 10586	FXD IND 2,2uH 10%
5102	2422 540 98518	RES CER 8MHz CSTS*MG03

DIODES

6100	4822 130 30621	1N4148
6101	4822 130 30621	1N4148
6102	4822 130 30621	1N4148
6104	4822 130 11148	BZX384-C4V7
6110	4822 130 11397	BAS316
6111	4822 130 11397	BAS316
6112	4822 130 11397	BAS316
6113	4822 130 11397	BAS316
6114	4822 130 11397	BAS316
6115	4822 130 11397	BAS316
6116	4822 130 11397	BAS316
6117	4822 130 11397	BAS316
6118	4822 130 11397	BAS316
6119	4822 130 11397	BAS316
6120	4822 130 11397	BAS316
6121	4822 130 11397	BAS316

TRANSISTORS & INTEGRATED CIRCUITS

7101	5322 130 60159	BC847B
7102	5322 130 60159	BC847B
7103	3139 240 50941	TMP87CM74AF - 'LX8300S50941'
7104	5322 130 60159	BC847B

Note : Only the parts mentioned in this list are normal service spare parts.

ELECTRICAL PARTS LIST - IR/FTD/LED BOARD

MISCELLANEOUS

1201	2422 025 17414	FLEX CONNECTOR 30P
1202	3139 111 04051	FTD FV818GN

DIODES

6200	9322 179 76676	LED VS LTL-816EELC
6201	9322 190 55676	LED VS LTL-816TDK3
6202	3198 020 55680	BZX384-C5V6

TRANSISTORS & INTEGRATED CIRCUITS

7200	9322 185 95667	IR RECEIVER TSOP4836YA1
7201	4822 130 60373	BC857B
7202	5322 130 60159	BC847B
7203	4822 130 42804	BC817-25
7204	4822 130 60373	BC857B
7205	4822 130 42804	BC817-25

Note : Only the parts mentioned in this list are normal service spare parts.

ELECTRICAL PARTS LIST - FRONT KEY BOARD

MISCELLANEOUS

1300	4822 267 10958	FLEX CONNECTOR 5P
1301	2422 129 16936	ROT ENCODER 32P
1302	4822 276 13775	TACT SWITCH
1303	4822 276 13775	TACT SWITCH
1304	4822 276 13775	TACT SWITCH
1305	4822 276 13775	TACT SWITCH
1306	4822 276 13775	TACT SWITCH
1307	4822 276 13775	TACT SWITCH
1308	4822 276 13775	TACT SWITCH
1309	4822 276 13775	TACT SWITCH

Note : Only the parts mentioned in this list are normal service spare parts.

AV BOARD

TABLE OF CONTENTS

Brief Introduction of the AV Board 7-1
Top View Layout 7-2
Bottom View Layout 7-3
Circuit Diagram (Part 1) 7-4
Circuit Diagram (Part 2) 7-5
Circuit Diagram (Part 3) 7-6
Circuit Diagram (Part 4) 7-7
Circuit Diagram (Part 5) 7-8
Circuit Diagram (Part 6) 7-9
Electrical parts list 7-10

BRIEF INTRODUCTION OF THE AV BOARD

The AV Board consists of the following features :

a. IC CS42418
IC CS42418 acts as both DAC and ADC. It accepts PCM data at sample rate from 4kHz to 192kHz audio data. The analog output is then fed into the Op-Amps which are used to filter and amplify the 6-channel signals before passing them onto the Power-Amp module.

There are eight 24 bit DAC within this chip, 6 of those are dedicated to the 6-channel output, the other 2 are used for LINE OUT signal.

This chip has 24 bit ADC. The internal stereo ADC is capable of independent gain control for single ended or differential analog input. The digital output line ADC_SDOUT is then passed on to the MTK of the SD6.3 module. CS42418 is controlled by the SD6.3 module via the I^2C bus.

b. IC HEF4052BT
The selection of TUNER, TV INPUT, AUX INPUT is made by IC HEF4052BT which acts as a multiplexer.

c. Video signals are buffered (not for all versions) before connecting to the TV.

d. YUV OUT
YUV OUT with cinch socket for connection to TV. Progressive Y Pb Pr is selected through RC.

e. LINE OUT
LINE OUT with cinch socket for connection to external amplifier.

f. SCART
SCART output for audio/video connection to TV (not for all versions).

g. S-Video and CVBS
S-Video and CVBS are used for video connection to the TV.

h. DIGITAL IN
DIGITAL IN with cinch socket for connection to DIGITAL OUT of other audio equipments.
The Digital_in source is fed to the SD6.3 module for audio decoding.

7-2

AV BOARD - TOP VIEW LAYOUT

1100 B10	2200 B5	2251 B3	2368 A8	2485 D8	2532 C4	2660 C9	3148 A9	3247 B4	3308 B9	3356 C7	3390 A8	3456 D7	3542 C4	3629 B6	3672 C9	5217 B5	7200 B4
1102 D3	2201 B5	2252 B5	2369 A8	2490 A6	2533 C3	2661 C9	3150 D4	3249 B4	3309 B9	3357 C7	3391 A8	3460 C5	3543 C4	3630 B6	3673 C9	5220 B4	7201 A3
1103 D4	2202 B5	2257 C5	2370 B9	2493 A6	2535 C3	2662 C8	3151 A9	3250 B4	3314 B9	3358 C8	3392 A8	3461 D6	3544 C4	3631 B6	3676 C9	5221 B4	7202 C3
1200 A5	2205 B4	2258 A3	2371 B9	2494 A6	2600 B6	2663 B9	3152 A9	3251 B4	3315 B9	3359 C8	3393 A8	3467 D10	3545 C4	3635 C6	3677 C9	5231 A3	7213 B3
1400 D9	2206 B4	2259 B3	2375 D2	2495 A6	2601 B6	2670 D2	3153 D5	3252 B4	3316 B9	3360 B9	3394 A8	3468 D9	3546 C4	3636 C7	3678 C9	5401 D7	7303 A8
1401 A6	2207 B3	2260 A2	2377 D2	2496 D8	2606 B7	2671 D2	3154 D5	3255 B4	3317 B9	3361 B9	3395 A8	3469 D9	3547 C4	3637 C7	3680 C9	5403 D6	7305 A8
1407 D6	2208 B5	2300 B8	2402 A9	2503 A4	2608 B6	3101 B10	3155 D4	3258 B4	3318 B9	3362 B9	3396 A8	3471 D8	3548 C3	3640 C7	3681 C9	5405 D8	7400 D9
1408 D7	2210 B4	2304 B9	2412 A9	2507 C1	2610 B6	3102 B10	3156 A9	3262 B4	3319 B9	3363 B9	3397 A8	3472 D8	3549 C3	3641 C7	3682 C9	5507 B1	7402 D9
1409 D7	2212 B5	2310 B8	2415 D10	2508 C2	2611 B7	3113 C5	3157 A9	3263 B4	3324 B8	3364 B9	3400 A9	3473 D8	3550 C4	3642 C7	3683 C9	6102 C4	7404 D6
1411 D5	2217 B4	2314 B9	2419 D10	2509 C2	2612 B6	3114 C5	3159 A9	3265 B4	3325 B7	3365 B9	3403 A9	3474 D9	3551 B3	3644 C6	3684 B9	6203 B6	7418 D9
1507 A2	2218 B4	2320 B7	2420 D10	2510 D2	2617 B6	3118 C5	3160 A9	3268 A3	3326 B7	3366 B9	3404 A8	3475 D9	3552 C3	3645 C6	3685 B9	6204 B6	7420 D9
1509 D2	2221 B4	2323 B8	2421 D10	2511 D1	2619 B6	3121 C5	3161 A9	3273 B5	3327 B7	3370 B8	3406 A9	3477 D8	3603 B7	3646 C6	3686 B9	6205 B6	7421 D10
1511 A3	2222 B5	2324 B7	2422 D10	2512 B1	2620 C6	3125 D3	3162 A9	3274 B5	3328 B8	3371 B8	3407 A9	3478 D9	3604 B7	3647 C6	3690 B9	6208 B2	7422 D9
2100 C5	2224 B3	2327 B7	2429 D7	2513 A1	2621 C6	3127 C5	3163 A9	3275 B5	3329 B8	3372 B8	3408 A8	3481 D9	3605 B7	3648 B7	3691 B9	6209 B2	7423 D9
2110 C5	2227 A4	2330 B7	2430 D8	2514 B1	2626 C7	3128 D3	3166 A9	3276 B5	3334 B7	3373 B8	3410 A8	3482 D8	3608 B7	3649 B7	3692 B9	6210 B3	7425 D8
2111 D3	2229 B4	2334 B8	2433 D10	2516 B1	2630 C6	3130 C5	3169 C5	3277 B5	3335 B7	3374 B8	3411 D8	3498 D5	3609 B7	3650 B7	3696 B9	6401 A8	7426 A8
2112 D3	2230 B4	2340 C7	2457 D6	2517 A1	2631 B7	3134 D4	3170 C5	3278 B5	3336 B7	3375 B8	3420 D9	3499 D5	3610 B6	3654 B7	3697 B9	6406 D9	7501 C1
2117 D4	2231 B4	2343 B7	2458 D7	2518 B1	2632 B6	3135 D4	3171 D4	3279 B5	3337 B8	3376 B8	3421 A8	3504 B3	3613 B6	3655 B7	3698 B9	6407 D10	7502 B1
2120 D4	2234 C4	2344 C8	2459 D6	2520 C1	2637 B6	3137 D4	3230 A5	3280 A3	3338 B8	3377 B8	3422 A8	3505 B3	3614 B6	3656 B7	3699 B9	6408 D9	7503 B1
2125 B8	2237 B4	2350 C7	2461 C10	2522 B2	2639 C6	3138 D4	3233 B4	3281 B3	3339 B8	3378 B9	3423 A8	3508 B1	3616 B7	3660 C6	4115 B5	6409 D9	7504 B1
2129 A9	2238 B3	2354 C7	2462 C8	2523 B2	2640 A8	3139 A9	3234 A4	3292 B3	3344 B7	3380 B8	3426 D9	3509 B1	3618 B7	3661 C6	4405 D5	6410 C4	7505 B2
2131 D4	2240 A3	2357 C8	2469 D5	2525 B2	2641 A8	3140 A8	3235 A4	3293 B4	3345 B7	3381 B8	3427 D10	3512 B3	3619 B7	3662 A7	4410 D8	6417 D9	7506 C3
2132 A9	2241 B3	2362 A8	2470 D5	2526 D1	2642 C8	3142 A9	3236 B4	3295 B4	3346 B7	3382 C8	3428 D9	3522 B3	3620 B7	3663 B6	4415 D6	6505 C1	7508 B1
2136 A9	2242 B3	2363 A8	2474 C5	2527 D1	2646 C9	3143 B9	3241 B4	3296 A4	3347 B8	3383 C8	3438 D6	3524 B1	3621 B7	3664 B6	4417 D8	6506 C1	7509 B3
2139 C10	2243 B3	2364 B8	2475 D6	2528 D2	2649 C9	3144 B9	3242 B4	3304 B9	3348 B8	3384 B8	3439 D6	3525 B1	3622 B7	3665 A7	4419 D7	6507 C4	7513 B3
2142 D5	2245 B3	2365 B8	2476 D7	2529 D1	2650 C9	3145 D5	3243 B4	3305 B9	3349 B8	3385 B8	3442 D6	3526 B1	3623 B7	3666 A7	4506 C1	6508 B6	7612 A7
2143 D5	2247 B3	2366 B8	2482 D7	2530 C3	2651 B9	3146 D5	3244 B4	3306 B9	3354 C8	3386 C8	3443 D6	3540 C4	3624 B6	3667 A7	4508 D4	7100 C10	
2144 D4	2250 A3	2367 C8	2484 D8	2531 D4	2653 B8	3147 A9	3245 B4	3307 B8	3355 C7	3387 C8	3445 D9	3541 C4	3628 B6	3671 C9	5216 B5	7105 C5	

This assembly drawing shows a summary of all possible versions. For components used in a specific version see schematic diagram and respective parts list.

3139 113 3552 pt7 dd wk0428

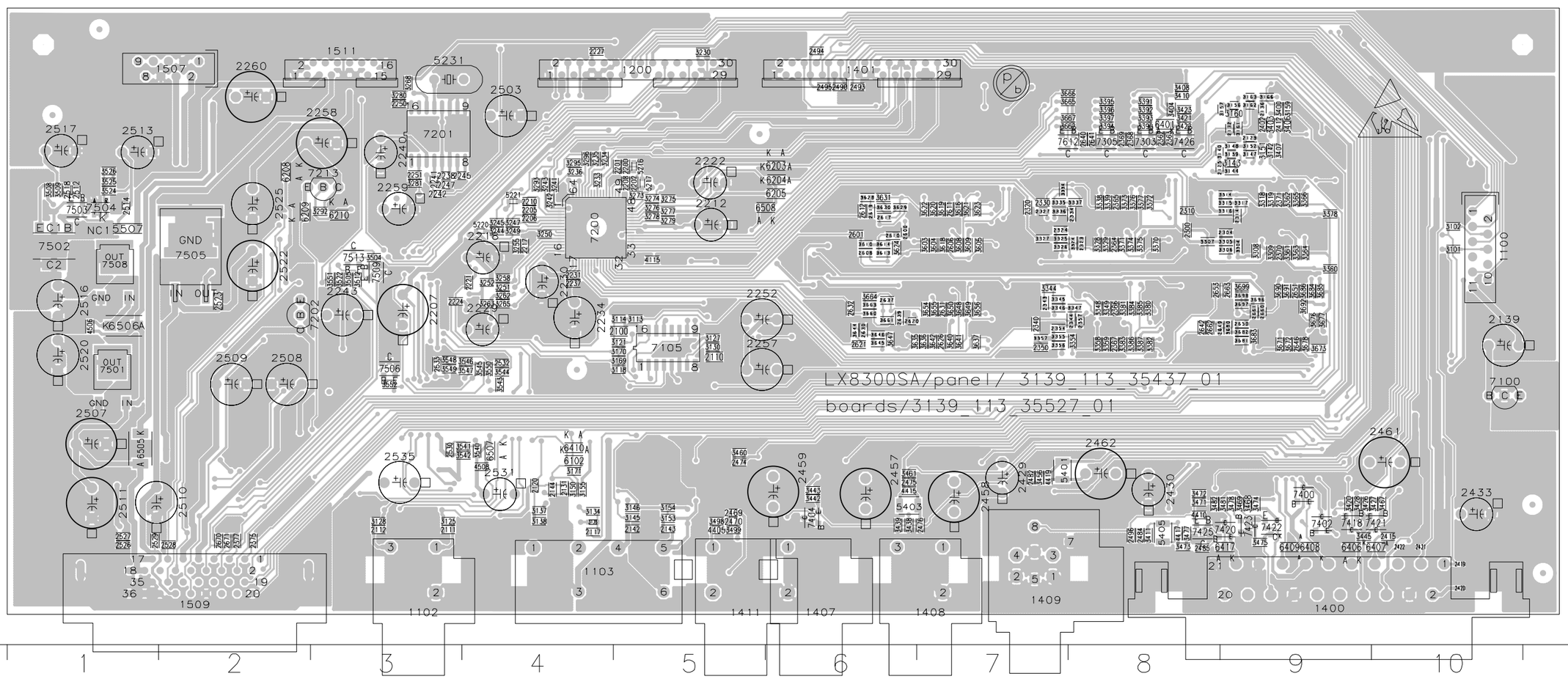

7-3

AV BOARD - BOTTOM VIEW LAYOUT

1100 B1	1200 A6	1407 D5	1411 D6	1511 A8	2212 B6	2229 B7	2240 A8	2257 C6	2260 A9	2433 D1	2459 D5	2503 A7	2509 C9	2513 A10	2520 C10	2531 D7	7100 C1
1102 D8	1400 D2	1408 D4	1507 A9	2139 C1	2218 B7	2230 B7	2243 B8	2258 A8	2429 D4	2457 D5	2461 C1	2507 C10	2510 D9	2516 B10	2522 B9	2535 C8	7202 C8
1103 D7	1401 A5	1409 D4	1509 D9	2207 B8	2222 B6	2234 C7	2252 B6	2259 B8	2430 D3	2458 D4	2462 C3	2508 C9	2511 D10	2517 A10	2525 B9	5231 A8	7213 B8

2108 C6	2134 A3	2246 B8	2376 D9	2431 D2	2483 D3	2648 C2	3133 D7	3224 C5	3260 B7	3401 A3	3446 D6	3527 D8	4406 C1	5402 D6	7102 D6	7313 B3	7602 B4
2109 C6	2135 A2	2254 A7	2404 A2	2432 D2	2491 A5	2652 C2	3136 D7	3225 B5	3261 B7	3402 A2	3447 D6	3528 D8	4407 D4	5404 D5	7103 D7	7322 B3	7603 B4
2113 D8	2140 B1	2255 A8	2406 A2	2454 D5	2492 A5	2657 C3	3165 A2	3226 B5	3264 B7	3405 A2	3450 D5	4105 D8	4408 D6	5406 B2	7104 A2	7323 C3	7604 B4
2114 D8	2141 B1	2303 B2	2407 A6	2455 D4	2504 A9	2659 B2	3168 C1	3227 B5	3269 B8	3430 D2	3451 C1	4106 A5	4409 C3	5407 A2	7210 A4	7324 B3	7607 C4
2115 D8	2150 C9	2306 B3	2408 B7	2456 D6	2505 A9	2664 D9	3210 B6	3228 B5	3270 B8	3431 D2	3452 D1	4109 C6	4411 D5	5408 D1	7300 B2	7325 C3	7608 C4
2116 D8	2151 D9	2307 B2	2409 A5	2465 D4	2506 A9	2665 D9	3211 B6	3229 B5	3271 A8	3432 D4	3453 D1	4110 C6	4412 D5	5409 D1	7301 B4	7401 D4	7609 B4
2118 D7	2152 B1	2313 B2	2410 A5	2467 D4	2515 B10	2666 D9	3212 B6	3237 B7	3272 A8	3433 D4	3454 D3	4113 D3	4413 D4	5505 B10	7302 C4	7403 D5	7610 B4
2119 D7	2211 B6	2326 B4	2411 A3	2471 A3	2519 C10	2669 D9	3213 C6	3238 A7	3282 C9	3434 D5	3455 D3	4114 D3	4414 D6	6101 C1	7306 B2	7405 D5	7614 C2
2121 D7	2213 B6	2333 B4	2413 A3	2472 A3	2521 B9	3111 B1	3214 C5	3239 B7	3283 A8	3435 D5	3462 D5	4116 B1	4416 D5	6201 C8	7307 B2	7411 A2	7615 C2
2122 D7	2216 B6	2353 C4	2416 D2	2473 D6	2524 B9	3112 B1	3215 C5	3246 B6	3284 A7	3436 D2	3502 C9	4200 A7	4418 C1	6202 B8	7308 B2	7416 A3	7616 B2
2123 A2	2220 B7	2356 C4	2418 D2	2477 D5	2534 D10	3123 D8	3220 C6	3248 B6	3285 A6	3437 D2	3503 C8	4401 D3	4507 D9	6206 A4	7309 B2	7417 A2	7617 B2
2124 B2	2225 B7	2372 D9	2423 D1	2478 D5	2605 B5	3124 D8	3221 C6	3253 B7	3286 A6	3440 D5	3506 C9	4402 D5	5222 B6	6509 D9	7310 B3	7512 C7	7618 C5
2127 A3	2226 B7	2373 D9	2424 D2	2480 C1	2625 C5	3131 D8	3222 C5	3254 B7	3287 A6	3441 D5	3507 C8	4403 D4	5223 B7	6510 C8	7311 B3	7600 B5	7619 C2
2128 B2	2239 A6	2374 D9	2427 D2	2481 D1	2628 C5	3132 D8	3223 B5	3259 B7	3294 B7	3444 D5	3523 A8	4404 D5	5400 D1	7101 D6	7312 B3	7601 B4	

This assembly drawing shows a summary of all possible versions. For components used in a specific version see schematic diagram and respective parts list.

3139 113 3552 pt7 dd wk0428

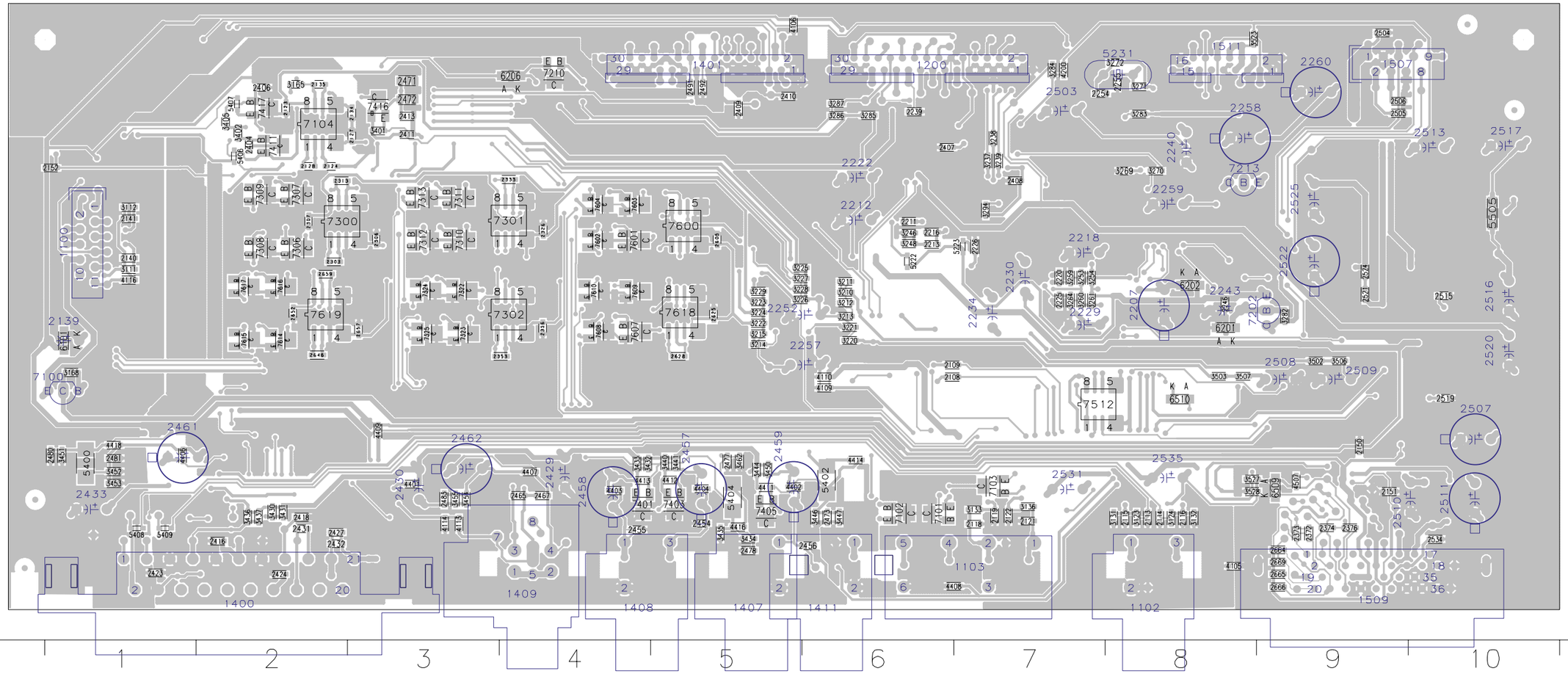

7-4

AV BOARD - CIRCUIT DIAGRAM (PART 1)

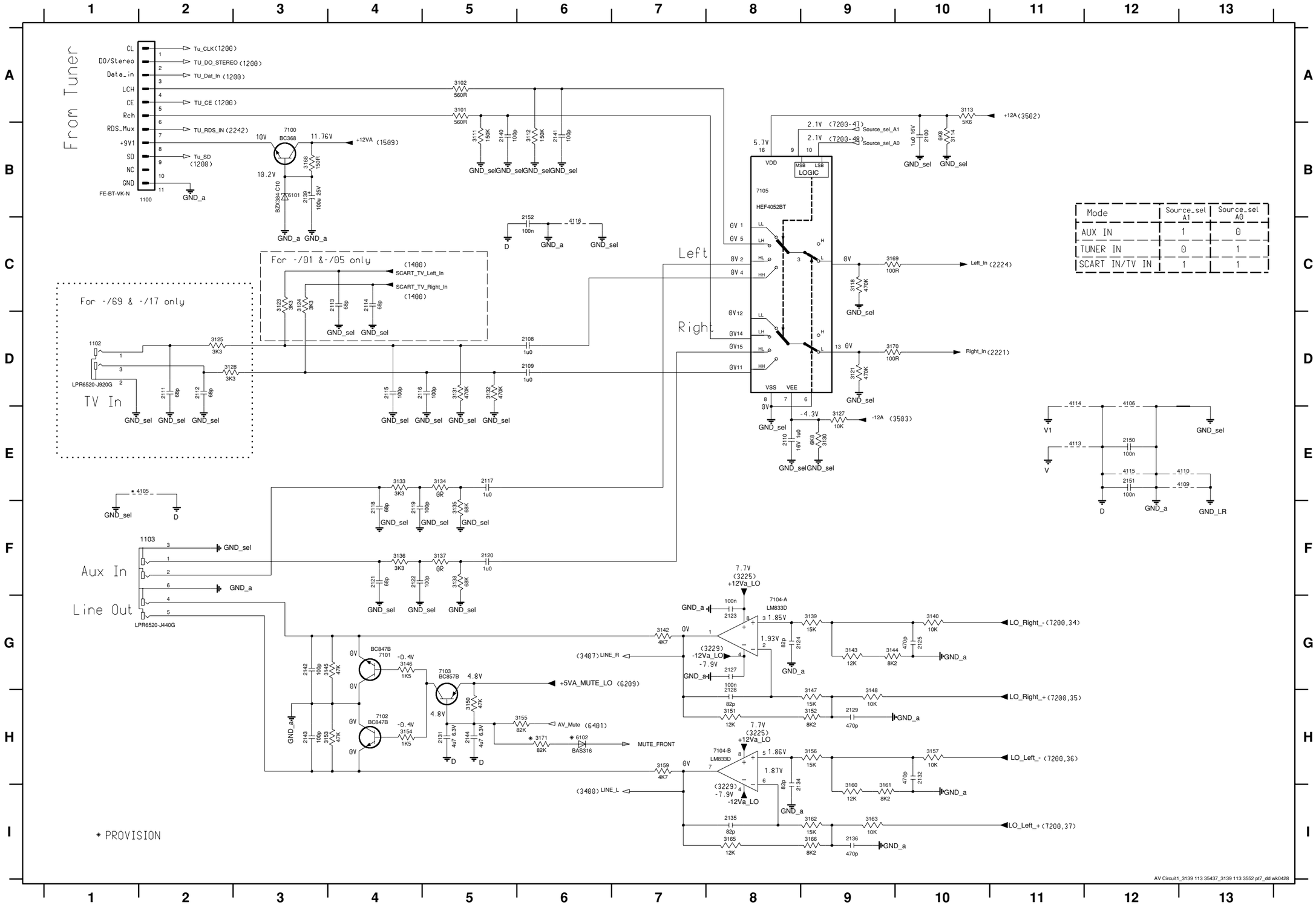

1100 B2
1102 D1
1103 F2
2100 B10
2108 D6
2109 D6
2110 E8
2111 D2
2112 D2
2113 C4
2114 C4
2115 D4
2116 D4
2117 E5
2118 F4
2119 F4
2120 F5
2121 F4
2122 F4
2123 G8
2124 G8
2125 G10
2127 G8
2128 H8
2129 H9
2131 H5
2132 H10
2134 I8
2135 I8
2136 I9
2139 B3
2140 B5
2141 B6
2142 G3
2143 H3
2144 H5
2150 E12
2151 E12
2152 C6
3101 A5
3102 A5
3111 B5
3112 B6
3113 A10
3114 B10
3118 C9
3121 D9
3123 C3
3124 C3
3125 D2
3127 E9
3128 D2
3130 E9
3131 D5
3132 D5
3133 E4
3134 E5
3135 F5
3136 F4
3137 F5
3138 F5
3139 G9
3140 G10
3142 G7
3143 G9
3144 G9
3145 G4
3146 G4
3147 H9
3148 H9
3150 H5
3151 H8
3152 H9
3153 H4
3154 H4
3155 H6
3156 H9
3157 H10
3159 H7
3160 I9
3161 I9
3162 I9
3163 I9
3165 I8
3166 I9
3168 B3
3169 C9
3170 D9
3171 H6
4105 E2
4106 D12
4109 E13
4110 E13
4113 E11
4114 D11
4115 E12
4116 C6
6101 B3
6102 H6
7100 B3
7101 G4
7102 H4
7103 G5
7104-A G8
7104-B H8
7105 B8

7-5

AV BOARD - CIRCUIT DIAGRAM (PART 2)

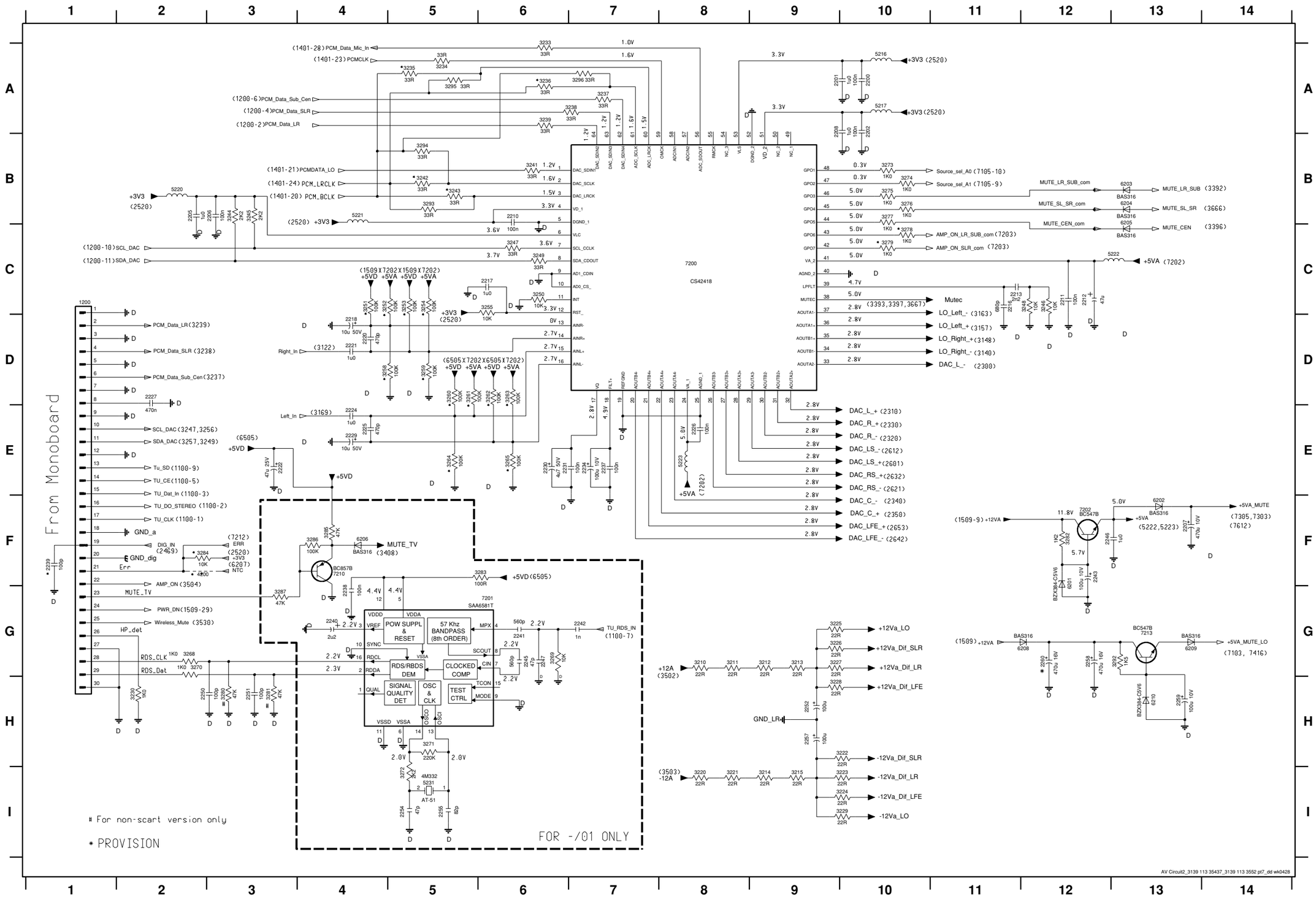

1200 C1
2200 A10
2201 A9
2202 A10
2205 B2
2206 B3
2207 F13
2208 A9
2210 B6
2211 C12
2212 C12
2213 C11
2216 C11
2217 C6
2218 D4
2220 D4
2221 D4
2222 E3
2224 E4
2225 E4
2226 E8
2227 D2
2229 E4
2230 E6
2231 E6
2234 E7
2237 E7
2238 G4
2239 F1
2240 G4
2241 G6
2242 G7
2243 F12
2245 G6
2246 F12
2247 G6
2250 H2
2251 H3
2252 H9
2254 I5
2255 I5
2257 H9
2258 G12
2259 H13
2260 G12
3210 G8
3211 G8
3212 G9
3213 G9
3214 I9
3215 I9
3220 I8
3221 I8
3222 H10
3223 I10
3224 I10
3225 G9
3226 G9
3227 G9
3228 H9
3229 I10
3230 H2
3233 A6
3234 A5
3235 A5
3236 A6
3237 A7
3238 A7
3239 A6
3241 B6
3242 B5
3243 B5
3244 B3
3245 B3
3246 C12
3247 C6
3248 C12
3249 C6
3250 C6
3251 C4
3252 C4
3253 C5
3254 C5
3255 C6
3258 D4
3259 D5
3260 D5
3261 D5
3262 D5
3263 D6
3264 E5
3265 E6
3268 G2
3269 G6
3270 G2
3271 H5
3272 I5
3273 B10
3274 B10
3275 B10
3276 B10
3277 B10
3278 C10
3279 C10
3280 H3
3281 H3
3282 F12
3283 F6
3284 F2
3285 F4
3286 F4
3287 G3
3292 G13
3293 B5
3294 B5
3295 A5
3296 A7
4200 F2
5216 A10
5217 A10
5220 B2
5221 B4
5222 C13
5223 E8
5231 I5
6201 F12
6202 F13
6203 B13
6204 B13
6205 C13
6206 F4
6208 G12
6209 G13
6210 H13
7200 C8
7201 G6
7202 F12
7210 F4
7213 G13

7-6

AV BOARD - CIRCUIT DIAGRAM (PART 3)

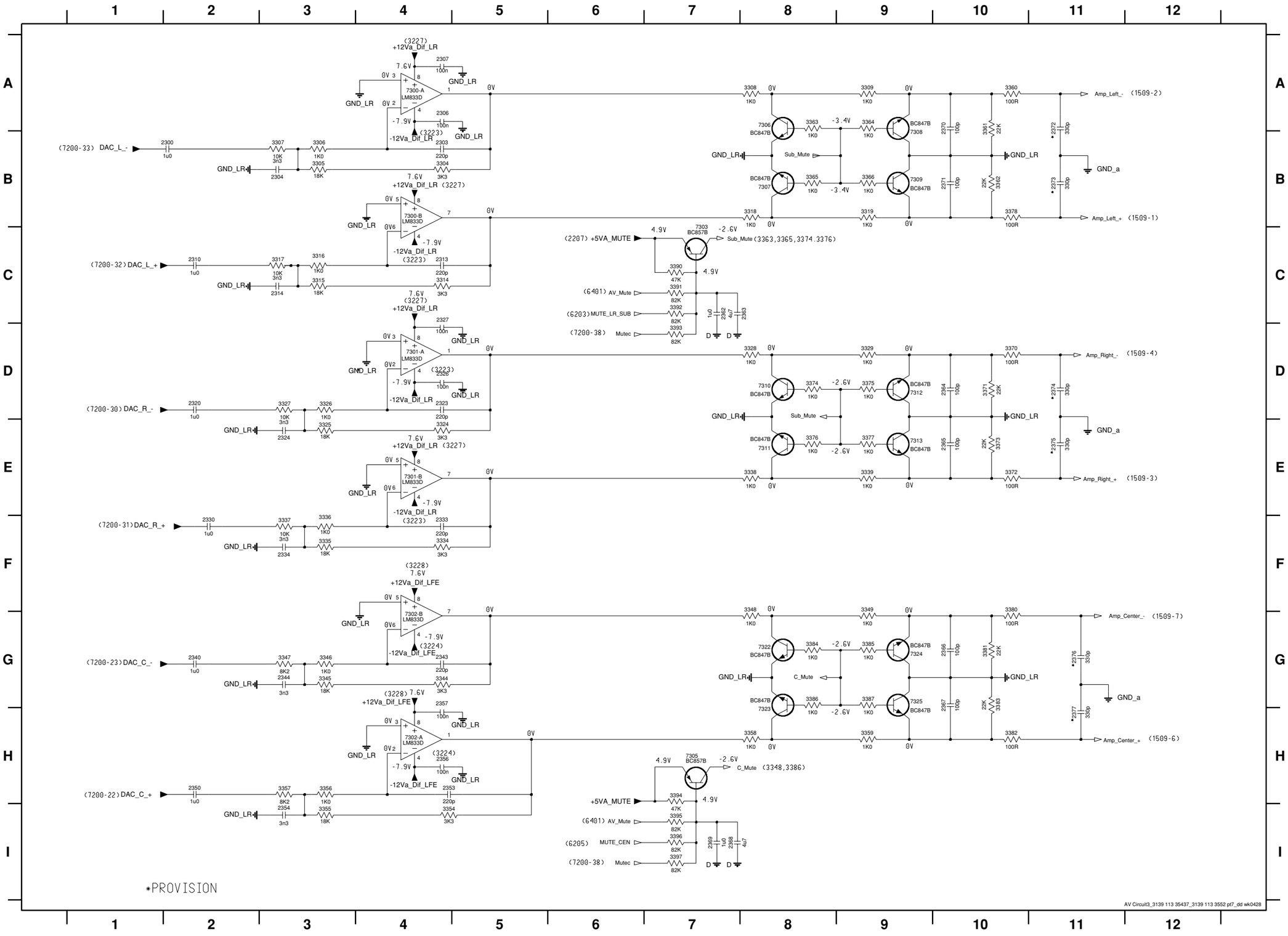

2300 B2
2303 B4
2304 B3
2306 A4
2307 A4
2310 C2
2313 C4
2314 C3
2320 D2
2323 D4
2324 E3
2326 D4
2327 C4
2330 F2
2333 F4
2334 F3
2340 G2
2343 G4
2344 G3
2350 H2
2353 H4
2354 I3
2356 H4
2357 G4
2362 C7
2363 C8
2364 D10
2365 E10
2366 G10
2367 G10
2368 I7
2369 I7
2370 A10
2371 B10
2372 A11
2373 B11
2374 D11
2375 E11
2376 G11
2377 H11
3304 B4
3305 B3
3306 B3
3307 B3
3308 A8
3309 A9
3314 C4
3315 C3
3316 C3
3317 C3
3318 B8
3319 B9
3324 E4
3325 E3
3326 D3
3327 D3
3328 D8
3329 D9
3334 F4
3335 F3
3336 E3
3337 F3
3338 E8
3339 E9
3344 G4
3345 G3
3346 G3
3347 G3
3348 F8
3349 F9
3354 I4
3355 I3
3356 H3
3357 H3
3358 H8
3359 H9
3360 A10
3361 A10
3362 B10
3363 A8
3364 A9
3365 B8
3366 B9
3370 D10
3371 D10
3372 E10
3373 E10
3374 D8
3375 D9
3376 E8
3377 E9
3378 B10
3380 F10
3381 G10
3382 H10
3383 G10
3384 G8
3385 G9
3386 G8
3387 G9
3390 C7
3391 C7
3392 C7
3393 D7
3394 H7
3395 I7
3396 I7
3397 I7
7300-A A4
7300-B B4
7301-A D4
7301-B E4
7302-A H4
7302-B G4
7303 C7
7305 H7
7306 A8
7307 B8
7308 A9
7309 B9
7310 D8
7311 E8
7312 D9
7313 E9
7322 G8
7323 G8
7324 G9
7325 G9

7-7

AV BOARD - CIRCUIT DIAGRAM (PART 4)

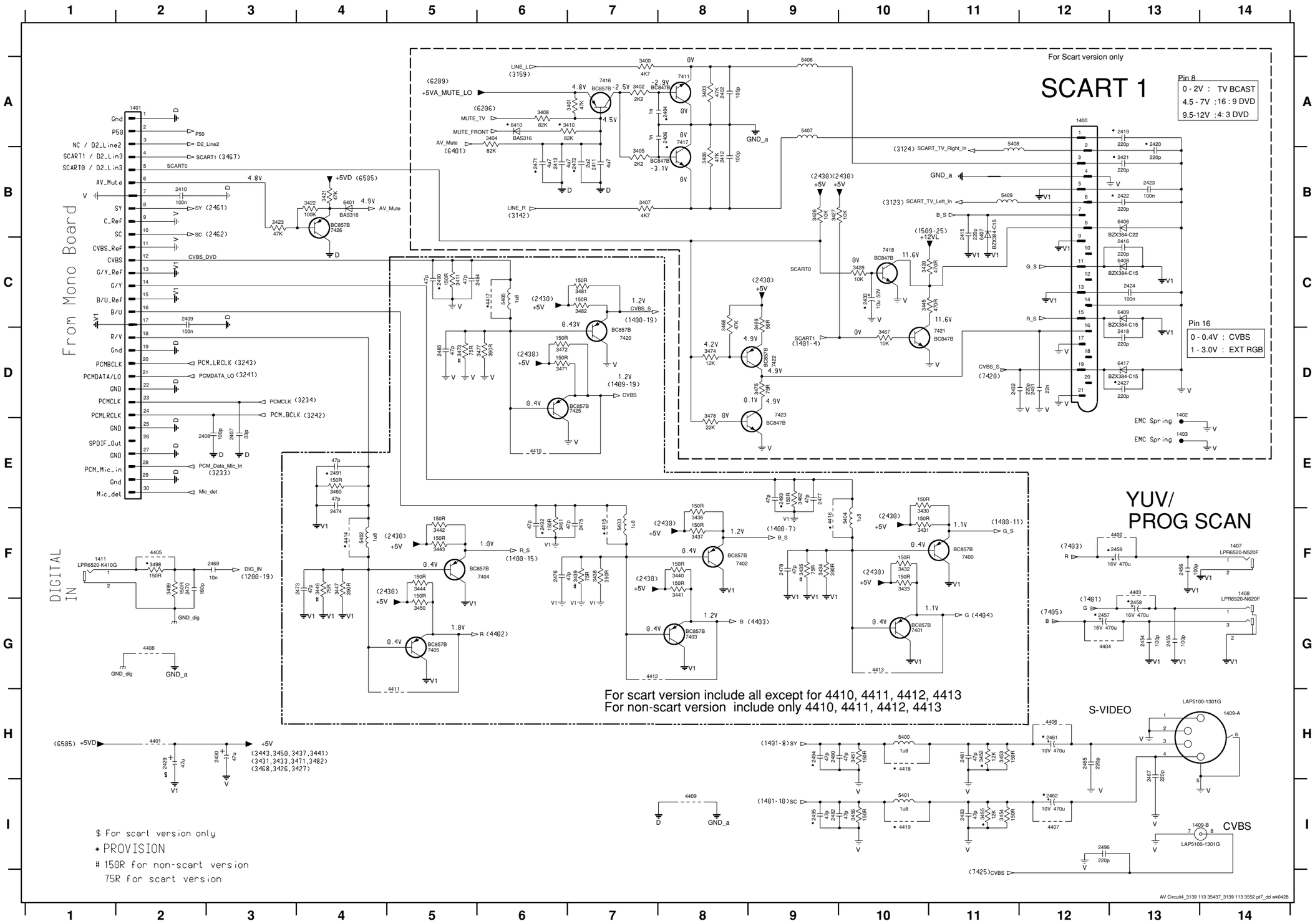

1400 A12	3471 D6
1401 A2	3472 D6
1402 D13	3473 D5
1403 E13	3474 D8
1407 F14	3475 D9
1408 F14	3477 D6
1409-A H14	3478 D8
1409-B I14	3481 C7
1411 F1	3482 C7
2402 A8	3498 F2
2404 A8	3499 F2
2406 A8	4401 H2
2407 E3	4402 F13
2408 E2	4403 F13
2409 C2	4404 G12
2410 B2	4405 F2
2411 B7	4406 H12
2412 B8	4407 I12
2413 B6	4408 G2
2415 B11	4409 I8
2416 C13	4410 E6
2418 D13	4411 H5
2419 A13	4412 G7
2420 A13	4413 G10
2421 B13	4414 F4
2422 B13	4415 F7
2423 B13	4416 F9
2424 C13	4417 C6
2427 D13	4418 H10
2429 H2	4419 I10
2430 H3	5400 H10
2431 D12	5401 I10
2432 D11	5402 F4
2433 C10	5403 F7
2454 G13	5404 F10
2455 G13	5405 C6
2456 F13	5406 A9
2457 G12	5407 A9
2458 G13	5408 A11
2459 F13	5409 B11
2461 H12	6401 B4
2462 I12	6406 B13
2465 H12	6407 B11
2467 H13	6408 C13
2469 F3	6409 C13
2470 F2	6410 A6
2471 B6	6417 D13
2472 B7	7400 F11
2473 F4	7401 G10
2474 F4	7402 F8
2475 F7	7403 G8
2476 F6	7404 F6
2477 E9	7405 G5
2478 F9	7411 A8
2480 H9	7416 A7
2481 H11	7417 A8
2482 I9	7418 C10
2483 I11	7420 D7
2484 C5	7421 D11
2485 D5	7422 D9
2490 C5	7423 D9
2491 E4	7425 D7
2492 F6	7426 B4
2493 E9	
2494 H9	
2495 I9	
2496 I12	
3400 A7	
3401 A7	
3402 A7	
3403 A8	
3404 A6	
3405 B7	
3406 B8	
3407 B7	
3408 A6	
3410 A7	
3411 C5	
3420 C10	
3421 B4	
3422 B4	
3423 B3	
3426 B9	
3427 B9	
3428 C10	
3430 F10	
3431 F10	
3432 F10	
3433 F10	
3434 F9	
3435 F9	
3436 F8	
3437 F8	
3438 F7	
3439 F7	
3440 F8	
3441 F8	
3442 F5	
3443 F5	
3444 F5	
3445 C10	
3446 F4	
3447 F4	
3450 G5	
3451 H10	
3452 H11	
3453 H11	
3454 I11	
3455 I11	
3456 I10	
3460 E4	
3461 F6	
3462 E9	
3467 D10	
3468 C8	
3469 C9	

7-8

AV BOARD - CIRCUIT DIAGRAM (PART 5)

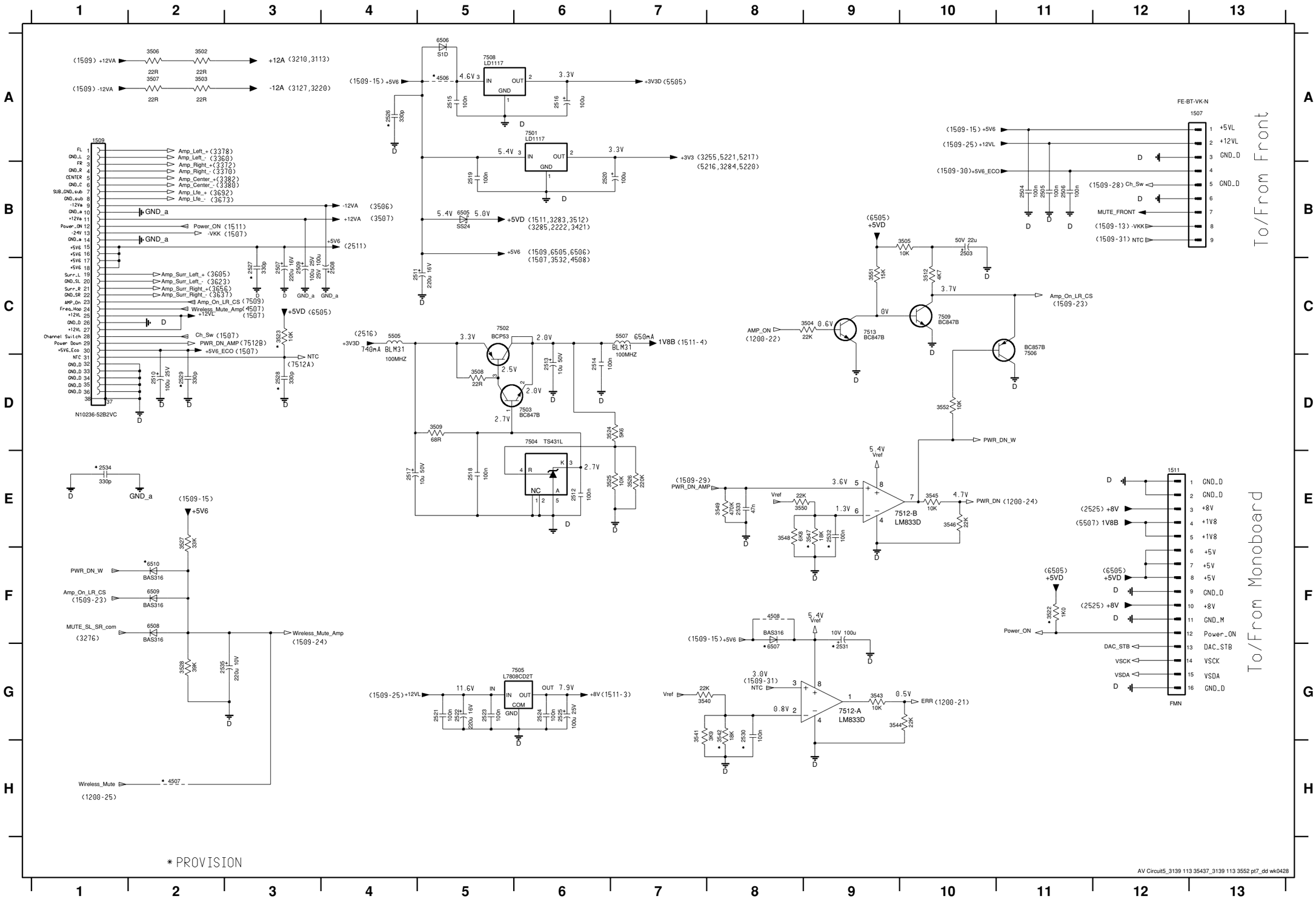

1507 A13
1509 A1
1511 E12
2503 B10
2504 B11
2505 B11
2506 B11
2507 C3
2508 C4
2509 C3
2510 D2
2511 C4
2512 E6
2513 D6
2514 D6
2515 A5
2516 A6
2517 E4
2518 E5
2519 B5
2520 B6
2521 G5
2522 G5
2523 G5
2524 G6
2525 G6
2526 A4
2527 C3
2528 D3
2529 D2
2530 G8
2531 G9
2532 E9
2533 E8
2534 E1
2535 G2
3502 A2
3503 A2
3504 C9
3505 B10
3506 A2
3507 A2
3508 D5
3509 D5
3512 C10
3522 F11
3523 C3
3524 D7
3525 E7
3526 E7
3527 E2
3528 G2
3540 G7
3541 G7
3542 G8
3543 G9
3544 G9
3545 E10
3546 E10
3547 E9
3548 E8
3549 E8
3550 E8
3551 C9
3552 D10
4506 A5
4507 H2
4508 F8
5505 C4
5507 C7
6505 B5
6506 A5
6507 G8
6508 F2
6509 F2
6510 F2
7501 A6
7502 C5
7503 D6
7504 D6
7505 G6
7506 C11
7508 A5
7509 C10
7512-A G9
7512-B E9
7513 C9

7-9

AV BOARD - CIRCUIT DIAGRAM (PART 6)

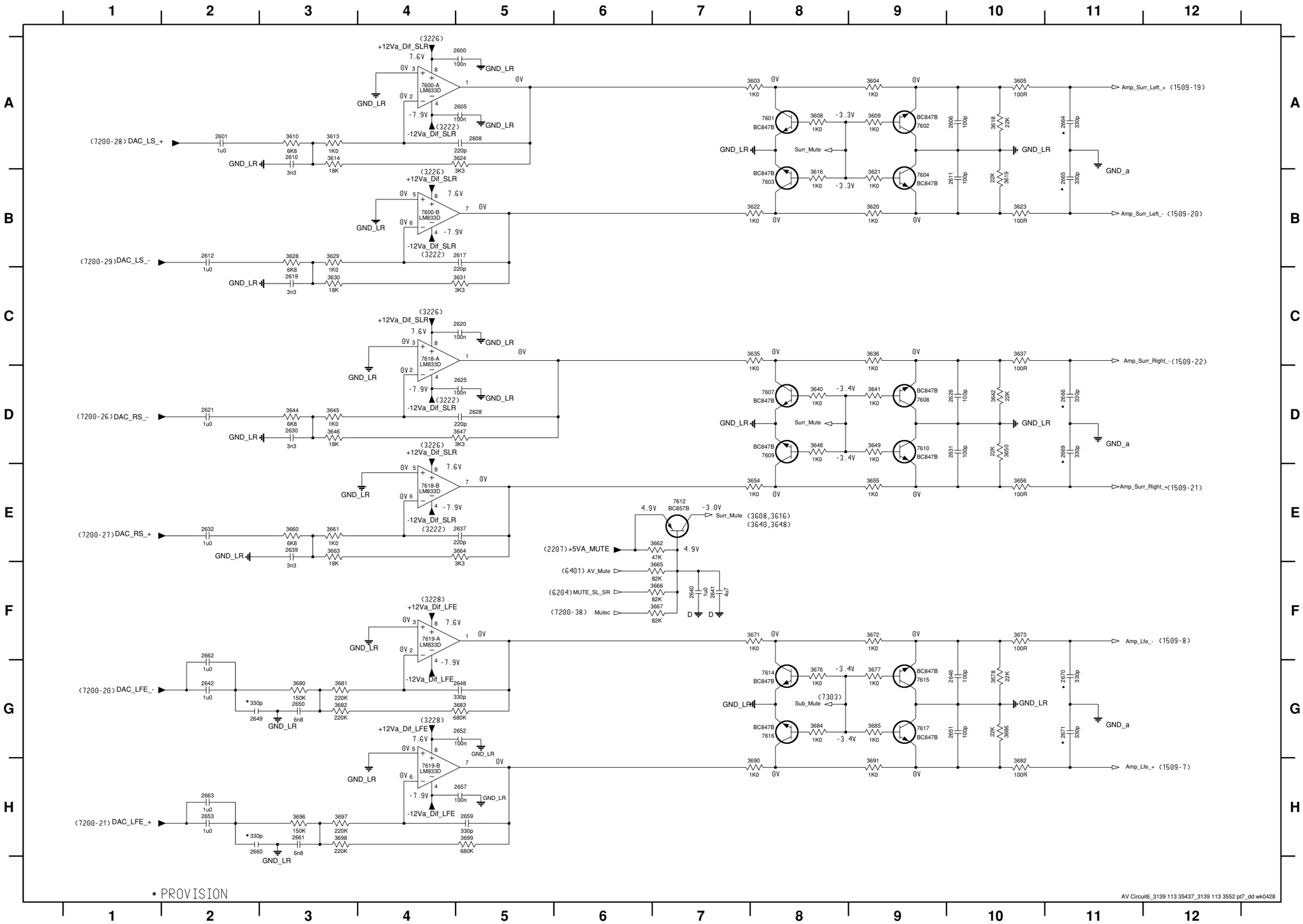

2600 A5
2601 A2
2605 A5
2606 A10
2608 A5
2610 A3
2611 B10
2612 B2
2617 B5
2619 C3
2620 C5
2621 D2
2625 D5
2626 D10
2628 D5
2630 D3
2631 D10
2632 E2
2637 E5
2639 E3
2640 F7
2641 F7
2642 G2
2646 G10
2648 G5
2649 G2
2650 G3
2651 G10
2652 G5
2653 H2
2657 H5
2659 H5
2660 H2
2661 H3
2662 F2
2663 H2
2664 A11
2665 B11
2666 D11
2669 D11
2670 G11
2671 G11
3603 A8
3604 A9
3605 A10
3608 A8
3609 A9
3610 A3
3613 A3
3614 A3
3616 B8
3618 A10
3619 B10
3620 B9
3621 B9
3622 B8
3623 B10
3624 A5
3628 B3
3629 B3
3630 C3
3631 C5
3635 C8
3636 C9
3637 C10
3640 D8
3641 D9
3642 D10
3644 D3
3645 D3
3646 D3
3647 D5
3648 D8
3649 D9
3650 D10
3654 E8
3655 E9
3656 E10
3660 E3
3661 E3
3662 E7
3663 E3
3664 E5
3665 F7
3666 F7
3667 F7
3671 F8
3672 F9
3673 F10
3676 G8
3677 G9
3678 G10
3680 G3
3681 G3
3682 G3
3683 G5
3684 G8
3685 G9
3686 G10
3690 H8
3691 H9
3692 H10
3696 H3
3697 H3
3698 H3
3699 H5

7600-A A4
7600-B B4
7601 A8
7602 A9
7603 B8
7604 B9
7607 D8
7608 D9
7609 D8
7610 D9
7612 E7
7614 G8
7615 G9
7616 G8
7617 G9
7618-A C4
7618-B E4
7619-A F4
7619-B H4

MISCELLANEOUS

1100	4822 267 11039	Flex Connector 11P
1102	2422 026 04754	Socket Cinch 2P (TV in)
1103	2422 026 05462	Soc. Cinch 4P (Aux-in/Line-out)
1200	2422 025 17433	Flex Connector 30P
1200	2422 025 17509	Flex Connector 30P
1401	2422 025 17509	Flex Connector 30P
1401	2422 025 17433	Flex Connector 30P
1407	2422 026 05531	Socket Cinch 1P (Pr)
1408	2422 026 05529	Socket Cinch 2P (Y/Pb)
1409	2422 033 00468	Socket 2P (Video/S-Video)
1411	2422 026 05427	Socket Cinch 1P (Digital in)
1507	2422 025 14518	Flex Connector 9P
1509	2422 025 05561	Socket MDR 36P
1509	2422 025 18466	Socket MDR 36P
1511	2422 025 16525	Flex Connector 16P

COILS & FILTERS

5216	2422 549 43062	IND FXD SM 100MHZ 600R
5217	2422 549 43062	IND FXD SM 100MHZ 600R
5220	2422 549 43062	IND FXD SM 100MHZ 600R
5221	2422 549 43062	IND FXD SM 100MHZ 600R
5222	2422 549 43062	IND FXD SM 100MHZ 600R
5223	2422 549 43062	IND FXD SM 100MHZ 600R
5400	3198 018 41880	FXD IND SM 1210 1U8 5%
5401	3198 018 41880	FXD IND SM 1210 1U8 5%
5402	3198 018 41880	FXD IND SM 1210 1U8 5%
5403	3198 018 41880	FXD IND SM 1210 1U8 5%
5404	3198 018 41880	FXD IND SM 1210 1U8 5%
5405	3198 018 41880	FXD IND SM 1210 1U8 5%
5505	4822 157 11717	IND FXD 1206 100MHZ 50R
5507	4822 157 11717	IND FXD 1206 100MHZ 50R

DIODES

6101	4822 130 11551	BZX384-C10
6201	3198 020 55680	BZX384-C5V6
6202	4822 130 11397	BAS316
6203	4822 130 11397	BAS316
6204	4822 130 11397	BAS316
6205	4822 130 11397	BAS316
6208	4822 130 11397	BAS316
6209	4822 130 11397	BAS316
6210	3198 020 55680	BZX384-C5V6
6401	4822 130 11397	BAS316
6505	3198 010 10720	DIO REC SS24
6506	9322 128 69685	DIO REC SM S1D
6508	4822 130 11397	BAS316
6509	4822 130 11397	BAS316

TRANSISTORS & INTEGRATED CIRCUITS

7100	5322 130 44647	BC368
7101	5322 130 60159	BC847B
7102	5322 130 60159	BC847B
7103	4822 130 60373	BC857B
7104	4822 209 30095	LM833D
7105	5322 209 11102	HEF4052BT
7200	9322 203 36668	IC SM CS42418-CQ
7202	4822 130 40959	BC547B
7213	4822 130 40959	BC547B
7300	4822 209 30095	LM833D
7301	4822 209 30095	LM833D
7302	4822 209 30095	LM833D
7303	4822 130 60373	BC857B
7305	4822 130 60373	BC857B
7306	5322 130 60159	BC847B
7307	5322 130 60159	BC847B
7308	5322 130 60159	BC847B
7309	5322 130 60159	BC847B
7310	5322 130 60159	BC847B
7311	5322 130 60159	BC847B
7312	5322 130 60159	BC847B
7313	5322 130 60159	BC847B
7322	5322 130 60159	BC847B
7323	5322 130 60159	BC847B
7324	5322 130 60159	BC847B
7325	5322 130 60159	BC847B
7426	4822 130 60373	BC857B
7501	4822 209 17398	LD1117DT33
7501	4822 209 17398	LD1117DT33
7502	5322 130 62804	BCP53
7503	5322 130 60159	BC847B
7504	9322 146 75685	IC SM TS431L
7505	9322 199 24668	IC SM L7808CD2T
7505	9322 113 71668	IC SM MC7808CD2T
7506	4822 130 60373	BC857B
7508	4822 209 17398	LD1117DT33
7508	4822 209 17398	LD1117DT33
7509	5322 130 60159	BC847B
7512	4822 209 30095	LM833D
7513	5322 130 60159	BC847B
7600	4822 209 30095	LM833D
7601	5322 130 60159	BC847B
7602	5322 130 60159	BC847B
7603	5322 130 60159	BC847B
7604	5322 130 60159	BC847B
7607	5322 130 60159	BC847B
7608	5322 130 60159	BC847B
7609	5322 130 60159	BC847B
7610	5322 130 60159	BC847B
7612	4822 130 60373	BC857B
7614	5322 130 60159	BC847B
7615	5322 130 60159	BC847B
7616	5322 130 60159	BC847B

7-10

ELECTRICAL PARTS LIST - AV BOARD

7617	5322 130 60159	BC847B
7618	4822 209 30095	LM833D
7619	4822 209 30095	LM833D

Note : Only the parts mentioned in this list are normal service spare parts.

BOX SPK ASSY SW8320LX
(Subwoofer & Module PWR308)

Mains pt5 / Reg pt6 / Amp UCD pt4 / Spk pt5 - 31 August 04

TABLE OF CONTENTS

Box Spk Assy SW8320LX
Exploded View & parts list 8-2

Module PWR308
Exploded View & parts list 8-3
Wiring Diagram 8-4
Regulator Board - Component Layout 8-5
Regulator Board - Chip Layout 8-6
Regulator Board - Circuit Diagram 8-7
Amplifier UCD Board - Top View Layout 8-8
Amplifier UCD Board - Bottom View Layout 8-9
Amplifier UCD Board - Circuit Diagram (Part 1) 8-10
Amplifier UCD Board - Circuit Diagram (Part 2) 8-11
Mains Board - Component Layout 8-12
Mains Board - Circuit Diagram 8-13
Mains Socket Board - Component Layout 8-14
Mains Socket Board - Circuit Diagram 8-14
Speaker Board - Component Layout 8-14
Speaker Board - Circuit Diagram 8-14
Electrical parts list 8-15

TECHNICAL REMARKS

8-2

EXPLODED VIEW - BOX SPK ASSY SW8320LX

PARTS LIST - BOX SPK ASSY SW8320LX

3139 119 02521	BOX SPK ASSY SW8320LX/69
9965 000 25359	WF 6.5" 150W 4R (16L80EHC3495)
9965 000 25360	TOP COVER
9965 000 25361	BACK PANEL
9965 000 25362	PORT TUBE
9965 000 25363	PLASTIC FOOT
9965 000 25364	RUBBER FOOT
9965 000 25365	LED 3 DIA RED ROUND

Note : Only the parts mentioned in this list are normal service spare parts.

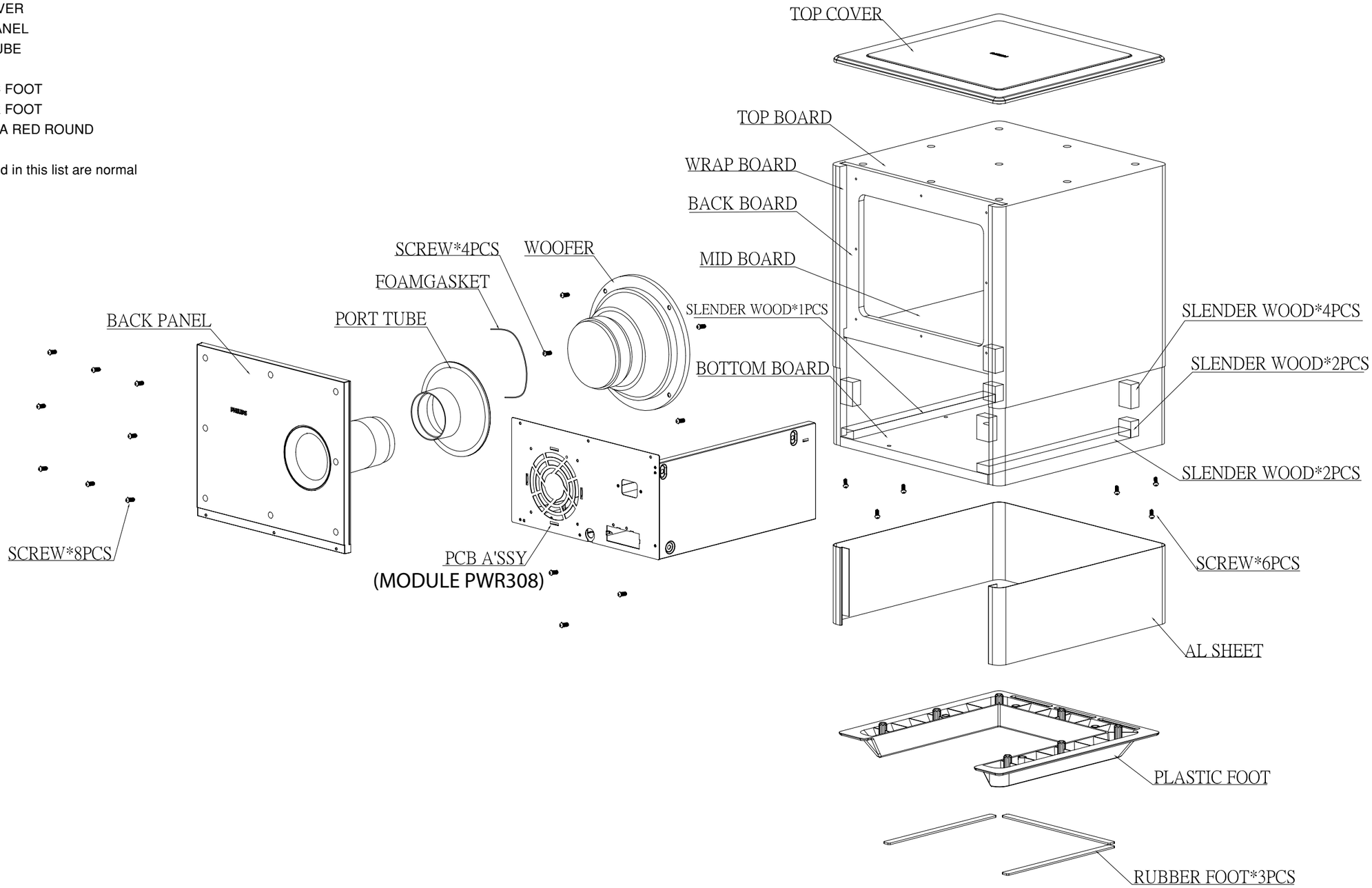

EXPLODED VIEW - MODULE PWR308

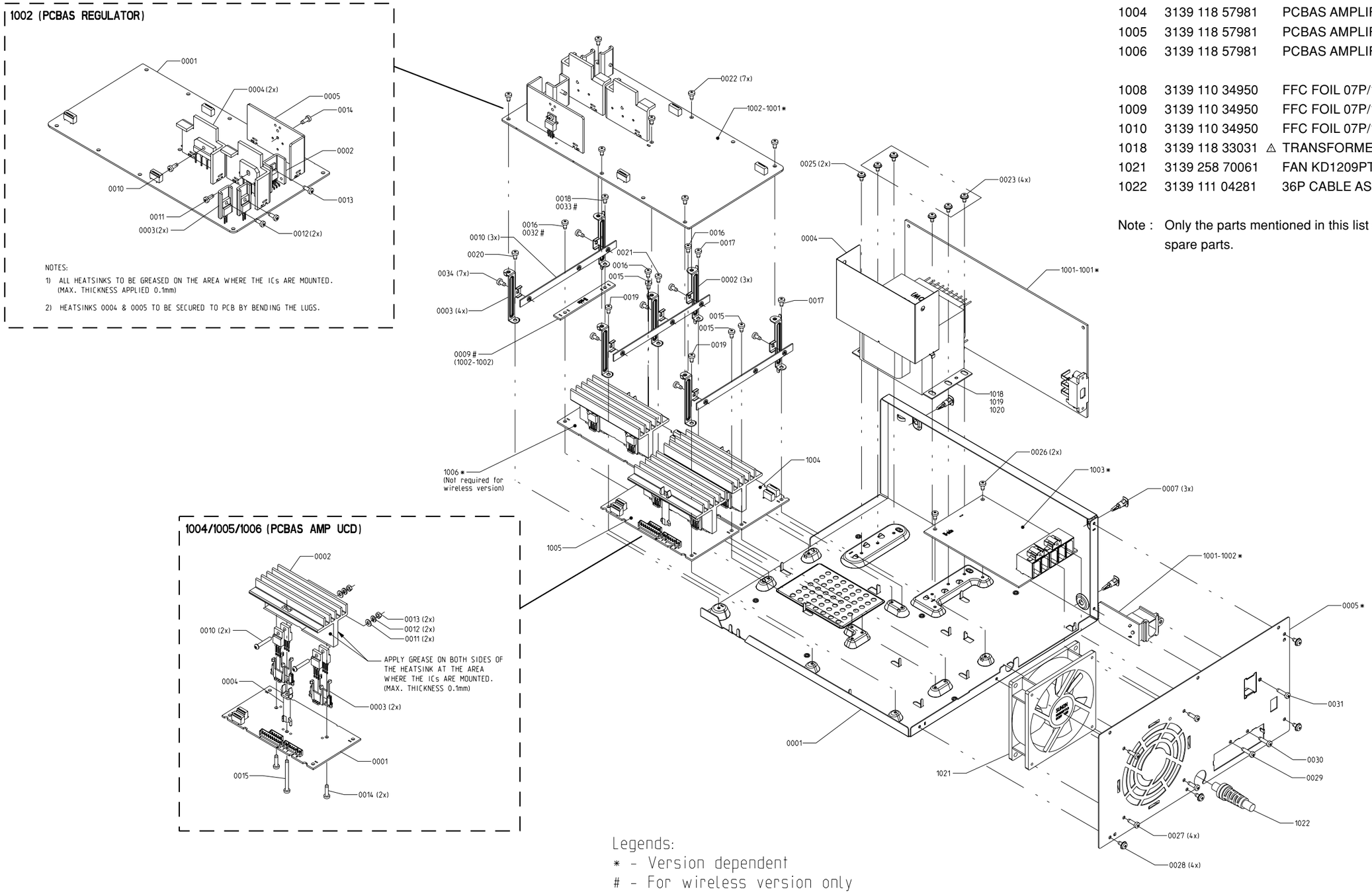

Legends:
* - Version dependent
# - For wireless version only

PARTS LIST - MODULE PWR308

0007	3139 240 40061	SPACER - 8MM
1001	3139 118 57961	PCBAS MAINS & MAINS SOCKET
1002	3139 118 57921	PCBAS REGULATOR
1003	3139 118 57931	PCBAS SPEAKER
1004	3139 118 57981	PCBAS AMPLIFIER UCD
1005	3139 118 57981	PCBAS AMPLIFIER UCD
1006	3139 118 57981	PCBAS AMPLIFIER UCD
1008	3139 110 34950	FFC FOIL 07P/120/07P AD
1009	3139 110 34950	FFC FOIL 07P/120/07P AD
1010	3139 110 34950	FFC FOIL 07P/120/07P AD
1018	3139 118 33031	⚠ TRANSFORMER MAINS
1021	3139 258 70061	FAN KD1209PTS3
1022	3139 111 04281	36P CABLE ASSY

Note : Only the parts mentioned in this list are normal service spare parts.

8-4

WIRING DIAGRAM - MODULE PWR308

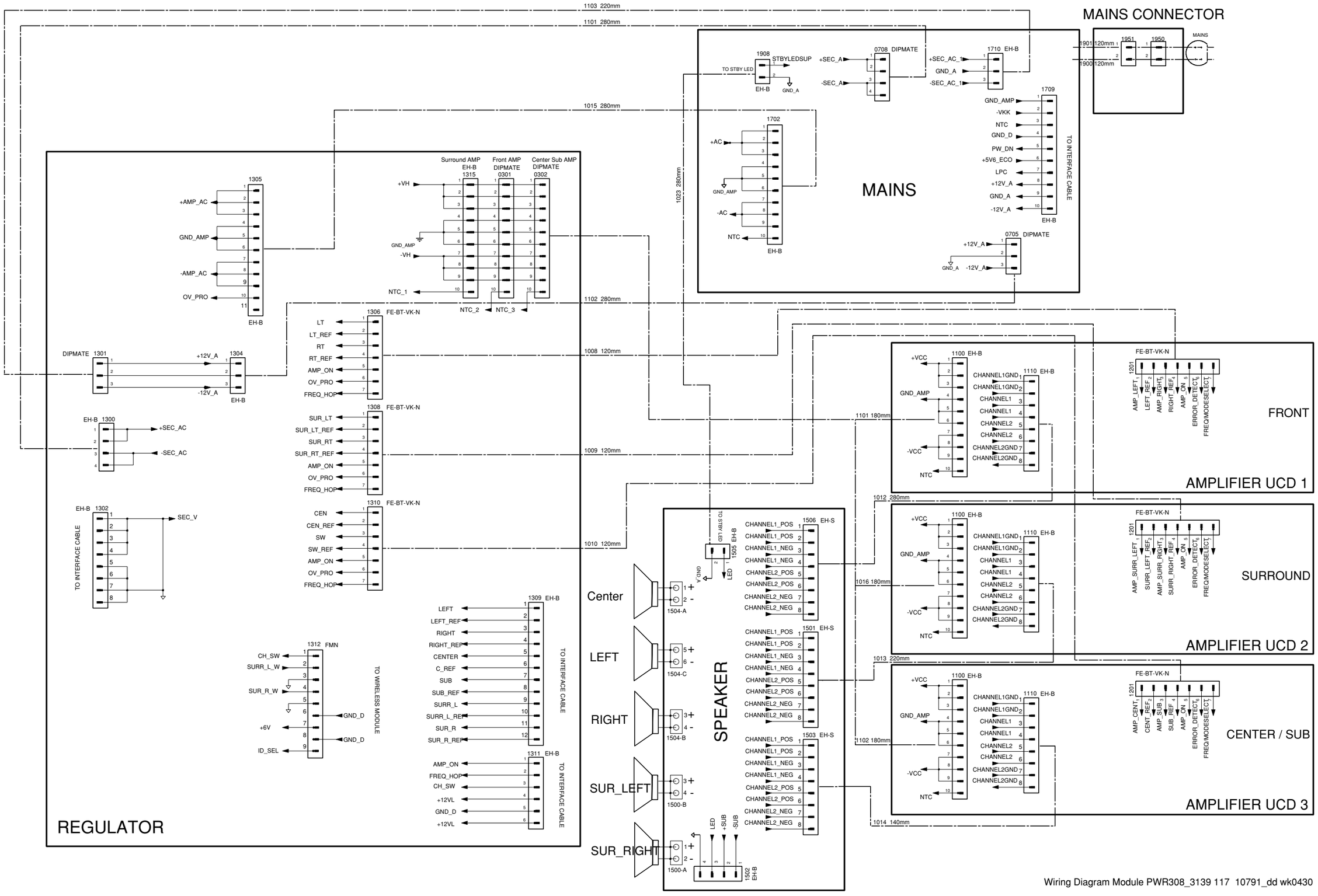

Wiring Diagram Module PWR308_3139 117 10791_dd wk0430

8-5

REGULATOR BOARD - COMPONENT LAYOUT

0301 C6	1308 A5	2309 C1	2317 B7	2325 B4	2333 A7	2341 A3	2365 E7	2373 A4	3331 A5	6315 C9	7316 B8	9114 A1	9124 C8	9132 B10	9145 A10	9153 E9
0302 B6	1309 D9	2310 D4	2318 A1	2326 C4	2334 E9	2342 A3	2366 E7	2374 D4	3344 A5	6316 A2	7321 A1	9115 B1	9125 A6	9133 E8	9146 A2	9154 A8
1300 B2	1310 A10	2311 D3	2319 A2	2327 B2	2335 E8	2343 B3	2367 E5	2377 D3	3389 B8	6317 A2	7322 A1	9116 D9	9126 A8	9134 B5	9147 E4	9155 B8
1301 A4	1311 D8	2312 E2	2320 A2	2328 B2	2336 A7	2344 B7	2368 E6	3303 B9	5300 E2	6318 A4	7323 C9	9117 A8	9127 A9	9135 B4	9148 D7	9300 A4
1302 C8	1312 A9	2313 E3	2321 A2	2329 C3	2337 D9	2361 D10	2369 A6	3325 C9	6306 C2	6319 A4	9110 D5	9118 E6	9128 A10	9136 D3	9149 E7	9301 C3
1304 A3	1313 B9	2314 E5	2322 B5	2330 C9	2338 D8	2362 D10	2370 A7	3326 C9	6307 B8	6320 A6	9111 C2	9119 A8	9129 A10	9137 A9	9150 E8	
1305 B4	1314 A9	2315 B2	2323 B4	2331 B9	2339 A4	2363 E9	2371 A6	3327 C9	6313 C4	7314 C1	9112 D2	9120 A8	9130 A7	9138 D2	9151 E8	
1306 E6	1315 B6	2316 B3	2324 D5	2332 B8	2340 A3	2364 E9	2372 A6	3329 C9	6314 C2	7315 E3	9113 D5	9121 A5	9131 B10	9142 B7	9152 E9	

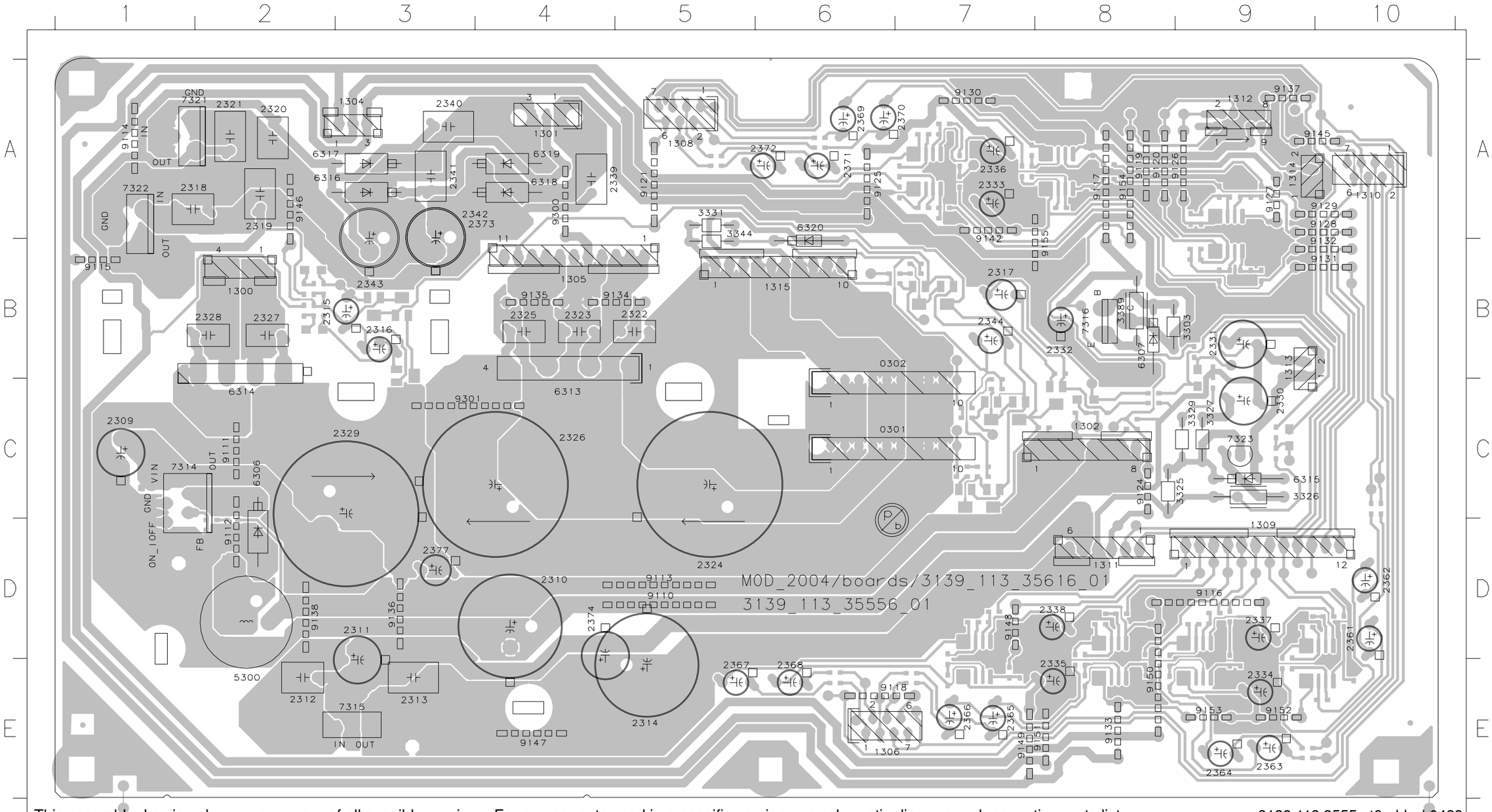

This assembly drawing shows a summary of all possible versions. For components used in a specific version see schematic diagram and respective parts list.

3139 113 3555 pt6 dd wk0429

8-6

REGULATOR BOARD - CHIP LAYOUT

2345 D2	2354 A3	2378 A2	3308 B9	3317 B2	3330 C3	3340 C4	3350 D4	3359 D1	3368 A3	3377 C1	3386 A5	4116 E2	6309 B9	7305 A4	7327 C4
2346 D2	2355 A4	2379 B2	3309 B9	3318 B2	3332 B4	3341 C4	3351 D2	3360 E2	3369 A4	3378 C1	3387 E5	4117 A4	6310 B2	7306 A2	7328 C4
2347 D3	2356 A3	3300 D9	3310 B2	3319 B2	3333 B4	3342 C4	3352 D2	3361 E3	3370 A4	3379 A6	3388 E5	4118 E3	6311 C3	7317 B8	7329 C4
2348 D4	2357 B2	3301 D9	3311 C3	3320 A2	3334 B5	3343 C4	3353 D3	3362 E4	3371 A4	3380 A6	4110 A4	4119 E3	6312 C2	7318 B8	
2349 E1	2358 B2	3302 D9	3312 C2	3321 A2	3335 B5	3345 C3	3354 D4	3363 E1	3372 A4	3381 E4	4111 C3	4300 B2	7300 E4	7319 B8	
2350 E2	2359 A2	3304 B9	3313 B2	3322 A2	3336 C4	3346 C3	3355 E2	3364 E3	3373 A4	3382 E4	4112 A4	4301 B2	7301 E3	7320 C3	
2351 E3	2360 A2	3305 B9	3314 C3	3323 B2	3337 C4	3347 D1	3356 E3	3365 E3	3374 A3	3383 E2	4113 C3	4302 A2	7302 E2	7324 B4	
2352 E4	2375 C10	3306 B9	3315 C2	3324 A2	3338 C4	3348 D2	3357 E3	3366 E4	3375 A4	3384 E2	4114 A4	4303 A2	7303 E1	7325 B4	
2353 A4	2376 D9	3307 B9	3316 B3	3328 C2	3339 C4	3349 D3	3358 E4	3367 A4	3376 A3	3385 A5	4115 D2	6308 B9	7304 A3	7326 C4	

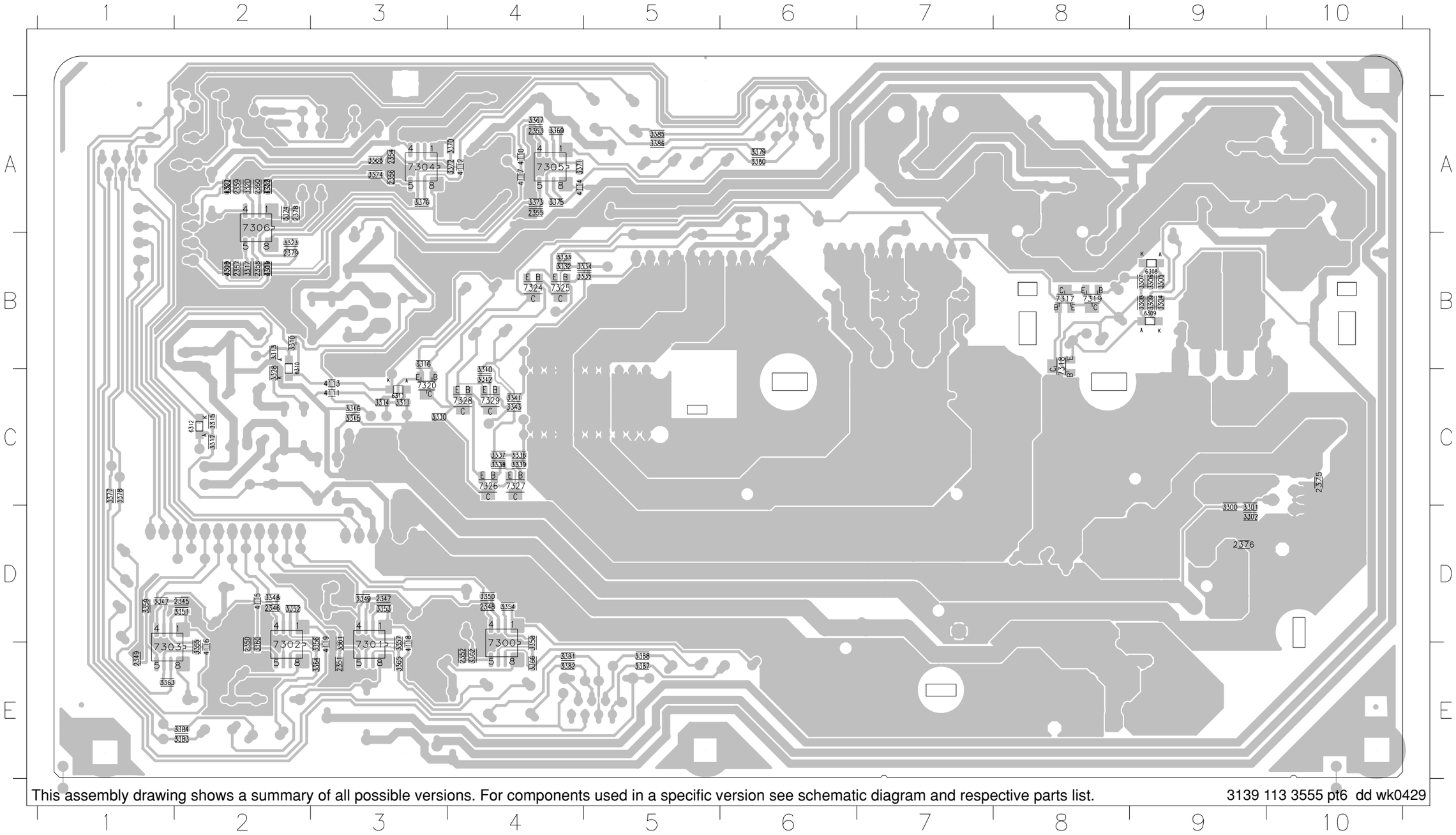

This assembly drawing shows a summary of all possible versions. For components used in a specific version see schematic diagram and respective parts list.

3139 113 3555 pt6 dd wk0429

8-7

REGULATOR BOARD - CIRCUIT DIAGRAM

0301 A11	1309 E14	2311 B1	2320 A6	2329 B13	2338 B8	2347 F6	2356 E9	2365 F8	2374 B2	3303 C1	3312 F1	3321 E4	3330 F3	3339 G1	3348 B9	3357 G7	3366 G10	3375 F7	3384 C11	4303 F4	6313 A8	7300-B G10	7305-A D7	7319 D2	7328 D13
0302 A11	1310 F13	2312 B1	2321 A6	2330 G4	2339 A5	2348 F9	2357 D4	2366 G8	2375 A1	3304 E1	3313 F1	3322 F4	3331 C3	3340 D12	3349 F6	3358 G9	3367 D6	3376 F10	3385 D11	5300 A2	6314 B12	7301-A F7	7305-B E7	7320 F3	7329 D13
1300 B4	1311 F14	2313 B2	2322 A9	2331 G5	2340 B5	2349 C6	2358 E4	2367 F10	2376 A2	3305 D1	3314 F1	3323 D5	3332 C12	3341 D12	3350 F9	3359 C6	3368 D9	3377 B8	3386 E11	6306 A2	6315 G4	7301-B G7	7306-A E5	7321 B6	9300 C3
1301 A4	1312 F12	2314 B2	2323 A8	2332 C2	2341 A4	2350 C9	2359 E4	2368 G10	2377 A3	3306 D1	3315 F1	3324 F5	3333 C13	3342 D13	3351 C7	3360 C9	3369 E7	3378 C8	3387 F10	6307 D1	6316 A5	7302-A B10	7306-B D5	7322 A6	9301 C3
1302 A3	1313 G5	2315 D2	2324 A9	2333 B8	2342 A5	2351 G6	2360 F4	2369 D10	2378 F5	3307 D2	3316 F2	3325 F4	3334 C12	3343 D12	3352 C10	3361 G6	3370 E10	3379 D8	3388 G10	6308 D1	6317 A5	7302-B C10	7314 A1	7323 G5	
1304 A7	1314 G11	2316 E2	2325 A8	2334 B8	2343 B5	2352 G9	2361 C8	2370 E10	2379 E5	3308 E2	3317 D4	3326 F5	3335 C12	3344 C3	3353 G7	3362 G9	3371 E7	3380 E8	3389 C2	6309 E2	6318 A4	7303-A B7	7315 B1	7324 C13	
1305 A12	1315 A10	2317 F2	2326 A9	2335 B8	2344 C4	2353 D6	2362 C8	2371 D8	2300 A2	3309 E1	3318 D4	3327 G4	3336 G1	3345 A3	3354 G10	3363 D7	3372 E9	3381 F8	4300 D4	6310 F2	6319 A4	7303-B C7	7316 C1	7325 D13	
1306 E12	2309 A1	2318 A6	2327 B12	2336 B8	2345 C6	2354 D9	2363 C10	2372 E8	3301 A2	3310 F1	3319 D4	3328 G4	3337 G1	3346 B3	3355 C7	3364 D10	3373 E6	3382 G8	4301 D4	6311 F2	6320 C4	7304-A D10	7317 D3	7326 G2	
1308 E13	2310 A2	2319 A6	2328 B13	2337 B8	2346 C9	2355 E6	2364 C10	2373 A5	3302 A2	3311 F1	3320 E4	3329 G4	3338 G2	3347 B6	3356 C9	3365 G7	3374 E9	3383 B11	4302 E4	6312 F3	7300-A F10	7304-B E10	7318 D3	7327 G2	

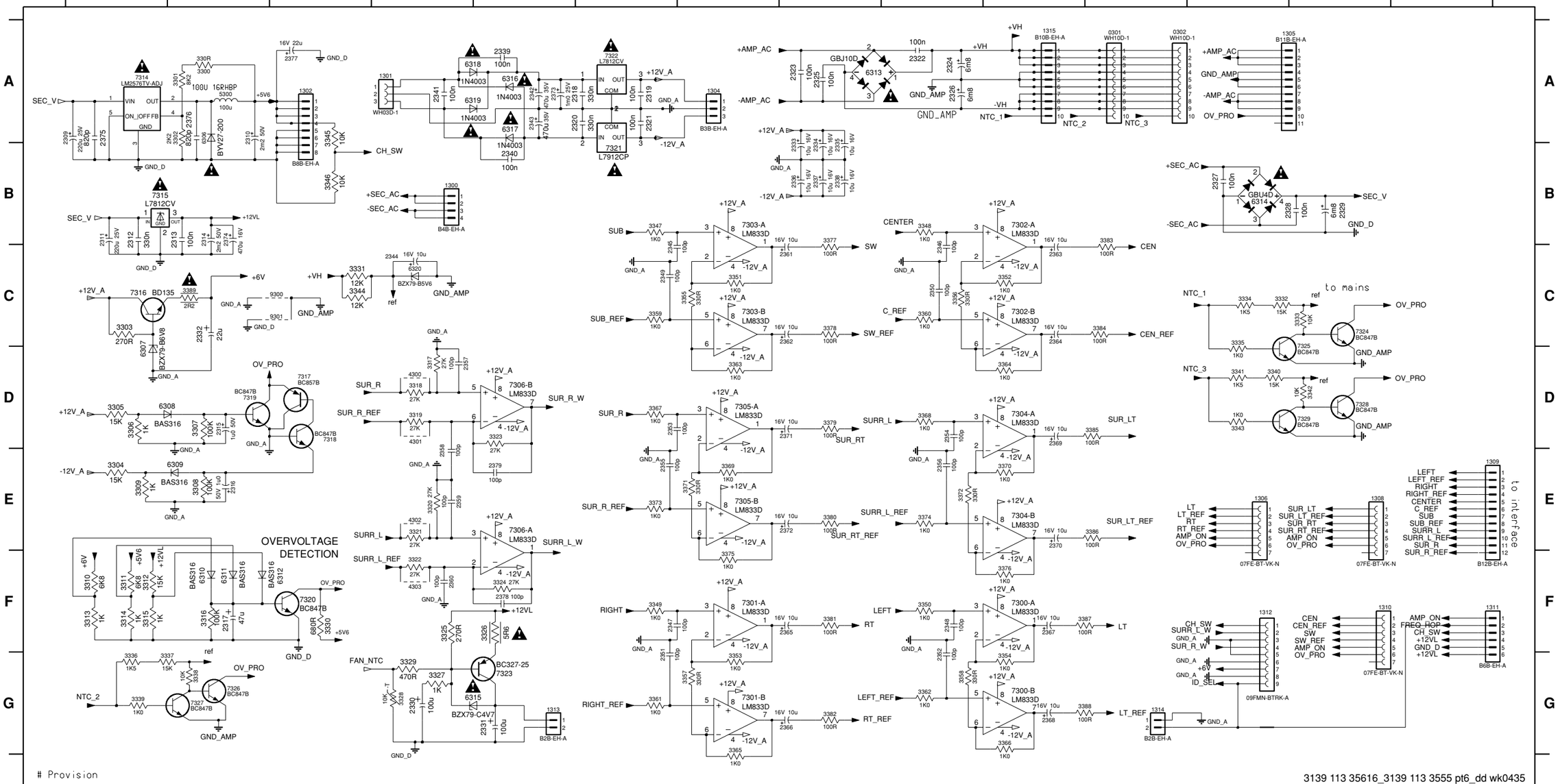

8-8

AMPLIFIER UCD BOARD - TOP VIEW LAYOUT

1100 B3	1201 B1	2117 A2	2159 A4	2172 B5	5102 B3	7101 A1	7158 A5
1105 B3	1202 B1	2118 A2	2164 A3	3122 A1	5105 B2	7108 A1	7162 A4
1110 B4	1203 A3	2123 A2	2166 A4	3172 A5	5151 B3	7112 A2	7165 A4
1115 B4	1204 A3	2124 A2	2168 A3	3190 A3	5152 B4	7117 A2	
1120 B4	2114 A2	2128 B2	2170 A4	5100 B3	5155 B4	7151 A5	

This assembly drawing shows a summary of all possible versions. For components used in a specific version see schematic diagram and respective parts list.

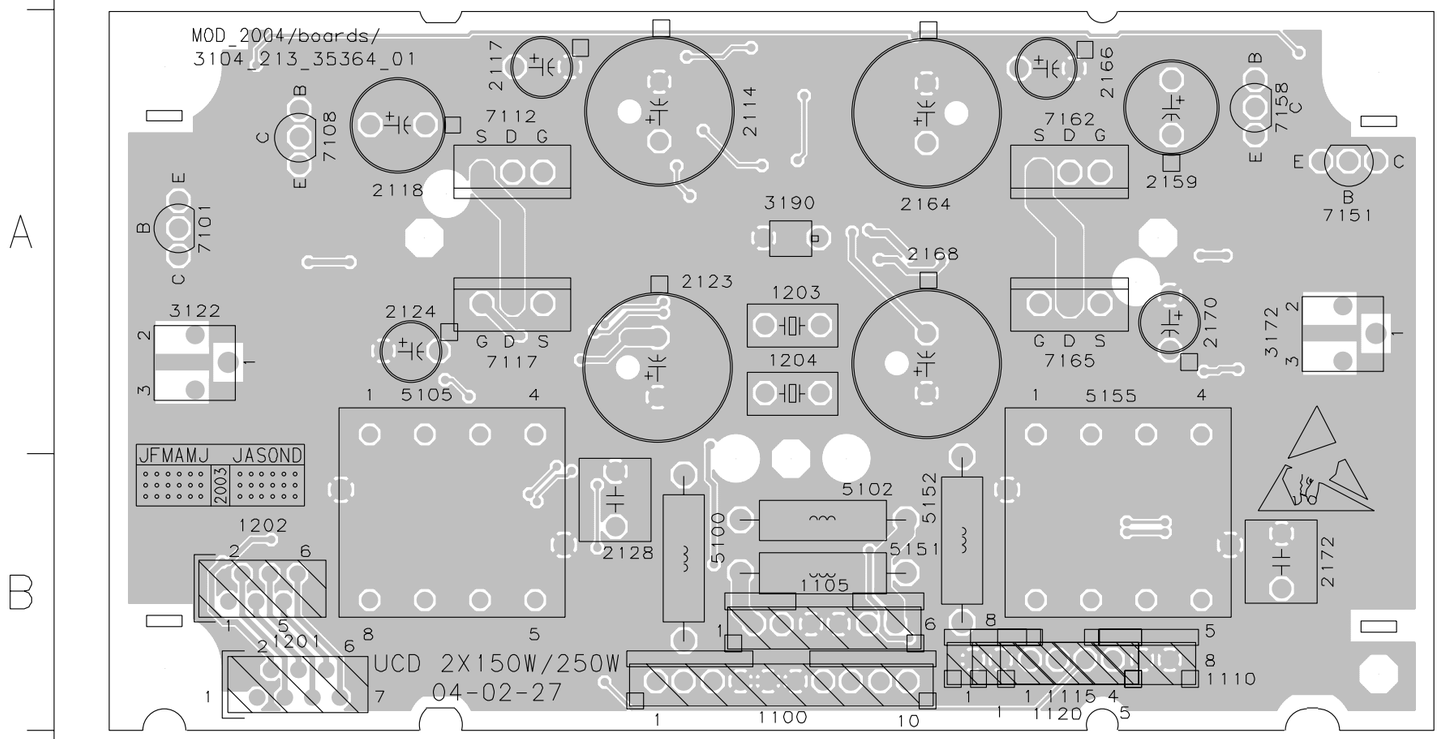

3104 213 3536 pt4 dd wk0429

8-9

AMPLIFIER UCD BOARD - BOTTOM VIEW LAYOUT

2100	B5	2122	A5	2161	A2	2208	B4	3106	B1	3125	A5	3141	A4	3162	A1	3178	A2	3196	A4	6154	A2	7210	A3	1100	B3
2101	B3	2125	A4	2162	B2	2209	B4	3107	A1	3126	A5	3142	A4	3163	A1	3179	A2	3197	A3	6155	A2	7211	B2	1105	B3
2102	B3	2126	A4	2163	A2	2210	A3	3108	B2	3127	A5	3144	A4	3164	A1	3180	A2	3198	A3	6156	A2	7212	B4	1110	B2
2107	B5	2127	A4	2165	A2	2211	A3	3112	B5	3128	A5	3145	A5	3165	B1	3181	A2	3199	A5	6157	A1	F100	B3	1115	B2
2108	B5	2129	A4	2167	A3	2212	B5	3113	B5	3129	A5	3150	B1	3166	A1	3182	A2	3200	A5	6158	A2	F101	B3	1120	B2
2109	B5	2150	B1	2169	A2	2213	B5	3114	B5	3130	A4	3151	B1	3167	A1	3183	A5	3201	B5	6159	A2	F102	B3	1201	B5
2110	B5	2151	B1	2171	A3	2214	B5	3115	B5	3131	A4	3152	B1	3168	A1	3184	A2	3202	B2	6160	A2	F103	B2	1202	B5
2111	B5	2152	B1	2173	A2	2215	B4	3116	B5	3132	A4	3153	B1	3169	A1	3185	A2	3203	A3	6200	B4	F104	B2	1203	A3
2112	A5	2153	B1	2201	B5	2216	B5	3117	B5	3134	A4	3154	B1	3170	A1	3186	A1	3204	B3	6201	B3	F105	B2	1204	A3
2113	A5	2154	B1	2202	B5	3100	B5	3118	B5	3135	A4	3155	B1	3171	B1	3187	A2	3205	A3	6202	A2	F106	B3	2114	A4
2115	A4	2155	B1	2203	A3	3101	B5	3119	A5	3136	A4	3156	B1	3173	A1	3188	A1	3206	A3	6203	B3	F107	A4	2117	A4
2116	A4	2156	A1	2204	A3	3102	B5	3120	A5	3137	A4	3157	B1	3174	A2	3192	B1	3207	A3	6204	B4	F108	A4	2118	A4
2119	A4	2157	A1	2205	A3	3103	A1	3121	A5	3138	A4	3158	B1	3175	A2	3193	B3	3208	A3	6205	A3	F109	A2	2123	A4
2120	A4	2158	A2	2206	A3	3104	A1	3123	A5	3139	A4	3160	B1	3176	A2	3194	B2	3209	A3	6206	A3	F110	A3	2124	A4
2121	A4	2160	A2	2207	A3	3105	B1	3124	A5	3140	A4	3161	B1	3177	A2	3195	A4	3210	A3	6210	B4	F111	A5	2128	B4
																		3211	A3	6211	B4	F112	B2	2159	A2
																		3212	A3	7100	A5	F113	A3	2164	A3
																		3213	A3	7102	A5	F114	B1	2166	A2
																		3214	A3	7103	A5	F115	B1	2168	A3
																		3215	A3	7104	A5	F116	B1	2170	A2
																		3216	A4	7105	A5	F117	B1	2172	B1
																		3217	A3	7106	A5	F118	B4	3122	A5
																		3218	A3	7107	A5	F119	B4	3172	A1
																		3219	A3	7109	A5	F120	B4	3190	A3
																		3220	A3	7110	A4	F121	A3	5100	B3
																		3222	A3	7111	A4	F122	A3	5102	B3
																		3223	A3	7113	A4			5105	B4
																		3224	A3	7114	A4			5151	B3
																		3225	B4	7115	A4			5152	B2
																		3226	B4	7116	A4			5155	B2
																		3231	B5	7150	A1			7101	A5
																		3232	B5	7152	A1			7108	A5
																		3233	B5	7153	A1			7112	A4
																		3234	B5	7154	A1			7117	A4
																		3235	A3	7155	A1			7151	A1
																		3236	A3	7156	A1			7158	A1
																		3237	A2	7157	A1			7162	A2
																		3238	B4	7159	A2			7165	A2
																		3239	B4	7160	A2				
																		4201	B5	7161	A2				
																		4202	B5	7163	A2				
																		6101	A5	7164	A2				
																		6102	A5	7167	A3				
																		6103	A5	7168	A3				
																		6104	A5	7200	B4				
																		6105	A5	7201	A3				
																		6106	A5	7202	A3				
																		6107	A4	7203	A3				
																		6108	A4	7204	A3				
																		6109	A4	7205	B4				
																		6110	A4	7206	B4				
																		6151	A1	7207	A3				
																		6152	A1	7208	A3				
																		6153	A2	7209	A3				

This assembly drawing shows a summary of all possible versions. For components used in a specific version see schematic diagram and respective parts list.

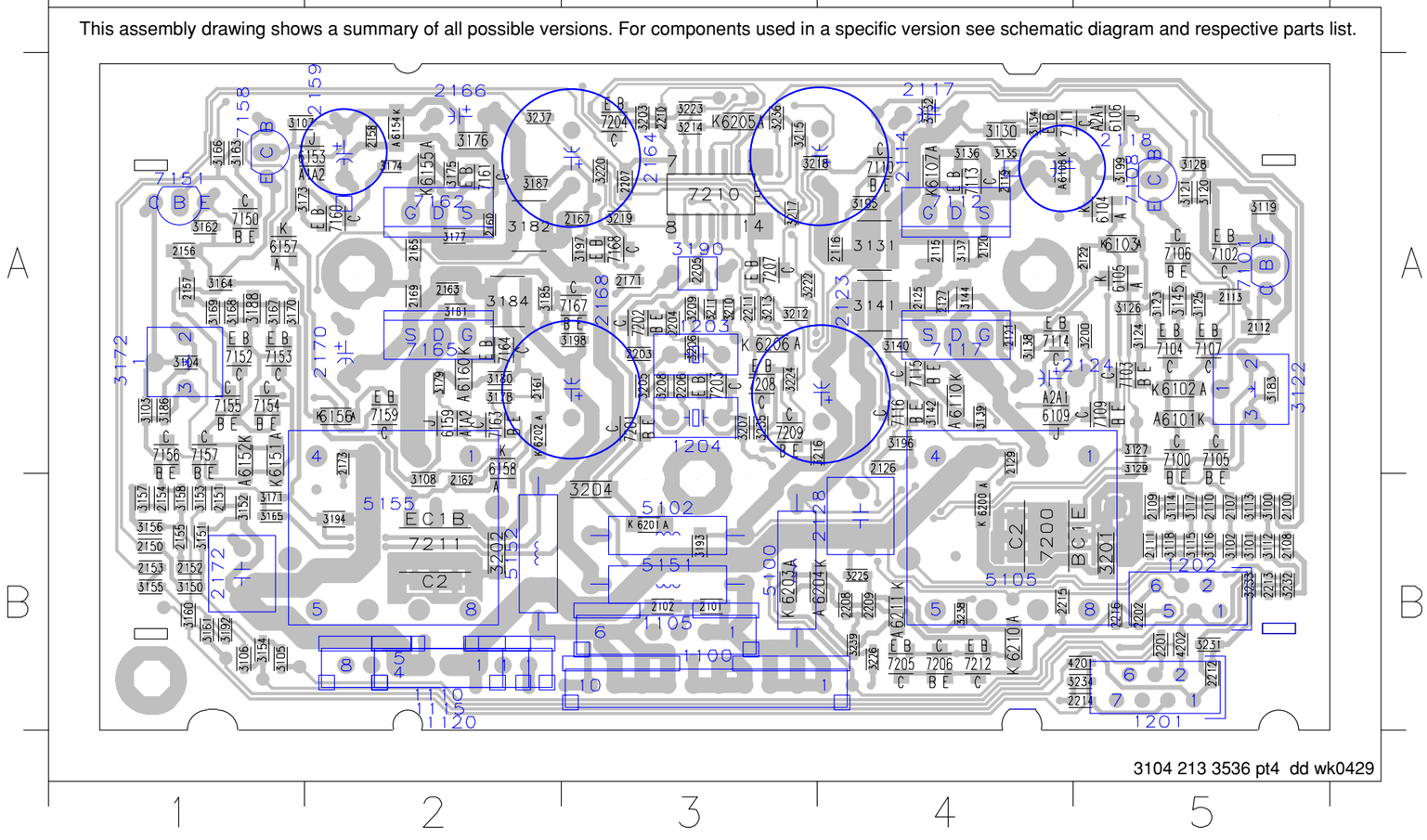

8-10

AMPLIFIER UCD BOARD - CIRCUIT DIAGRAM (PART 1)

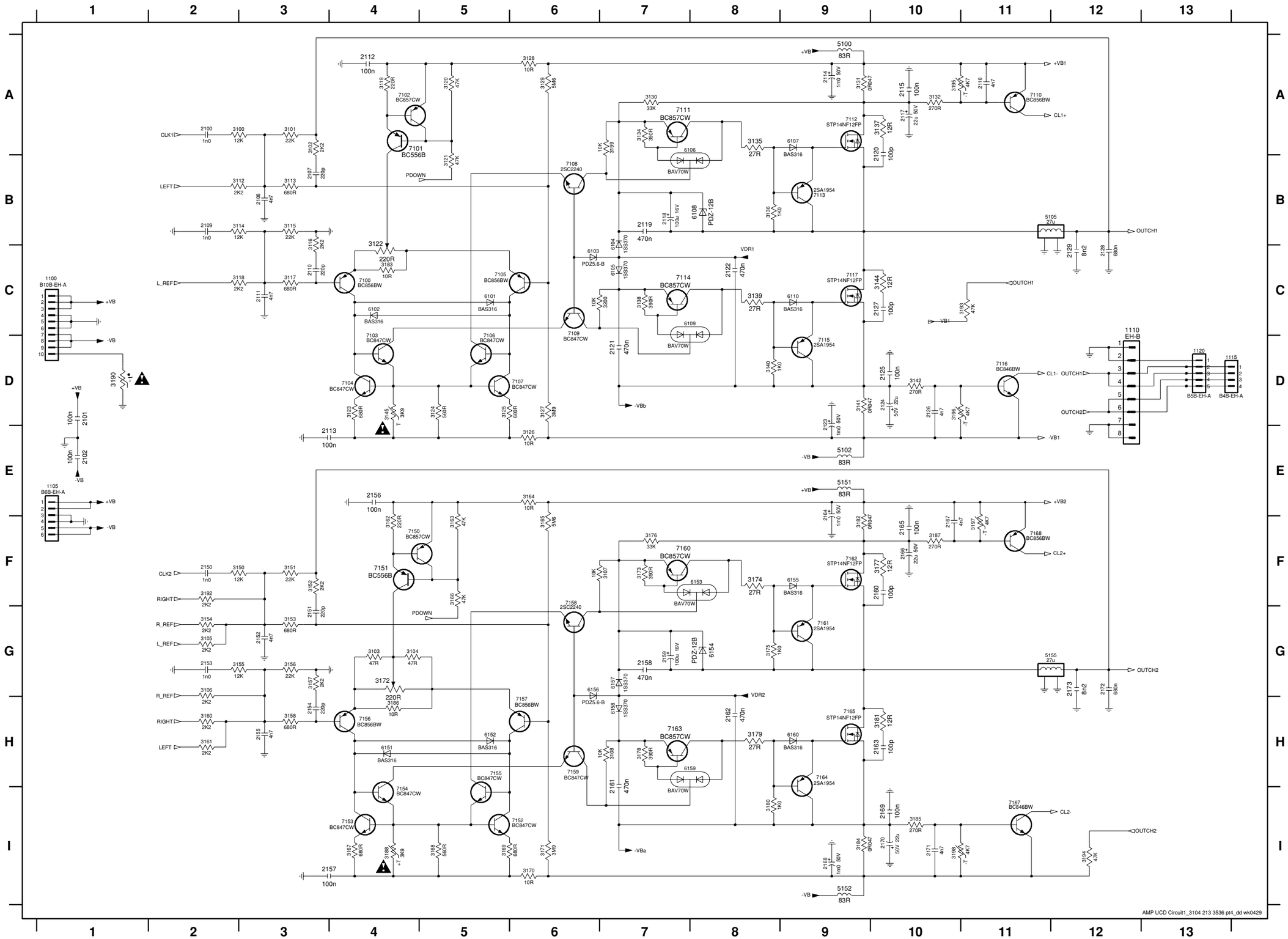

1100 C1
1105 E1
1110 C12
1115 D13
1120 D13
2100 A2
2101 D1
2102 E1
2107 B3
2108 B3
2109 B2
2110 C3
2111 C3
2112 A4
2113 E3
2114 A9
2115 A10
2116 A11
2117 A10
2118 B7
2119 B7
2120 A10
2121 D7
2122 C8
2123 D9
2124 D10
2125 D10
2126 D10
2127 C10
2128 C12
2129 C12
2150 F2
2151 G3
2152 G3
2153 G2
2154 H3
2155 H3
2156 E4
2157 I3
2158 G7
2159 G7
2160 F10
2161 H7
2162 H8
2163 H10
2164 E9
2165 F10
2166 F10
2167 F10
2168 I9
2169 I10
2170 I10
2171 I10
2172 G12
2173 G12
3100 A2
3101 A3
3102 A3
3103 G4
3104 G4
3105 G2
3106 G2
3107 F7
3108 H7
3112 B2
3113 B3
3114 B2
3115 B3
3116 B3
3117 C3
3118 C2
3119 A4
3120 A5
3121 B5
3122 B4
3123 D4
3124 D5
3125 D5
3126 E6
3127 D6
3128 A6
3129 A6
3130 A7
3131 A9
3132 A10
3134 A7
3135 A8
3136 B8
3137 A10
3138 C7
3139 C8
3140 D8
3141 D9
3142 D10
3144 C10
3145 D4
3150 F2
3151 F3
3152 F3
3153 G3
3154 G2
3155 G2
3156 G3
3157 G3
3158 H3
3160 H2
3161 H2
3162 F4
3163 F5
3164 E6
3165 F6
3166 F5
3167 I4
3168 I5
3169 I5
3170 I6
3171 I6
3172 G4
3173 F7
3174 F8
3175 G8
3176 F7
3177 F10
3178 H7
3179 H8
3180 I8
3181 H10
3182 F9
3183 C4
3184 I9
3185 I10
3186 H4
3187 F10
3188 I4
3190 D1
3192 F2
3193 C11
3194 I12
3195 A10
3196 D10
3197 F11
3198 I10
3199 A7
3200 C7
5100 A9
5102 E9
5105 B12
5151 E9
5152 I9
5155 G12
6101 C5
6102 C4
6103 C6
6104 B7
6105 C7
6106 A7
6107 A9
6108 B8
6109 C7
6110 C9
6151 H4
6152 H5
6153 F8
6154 G8
6155 F9
6156 G6
6157 G7
6158 H7
6159 H7
6160 H9
7100 C4
7101 A5
7102 A4
7103 D4
7104 D4
7105 C5
7106 D5
7107 D6
7108 B6
7109 C6
7110 A11
7111 A8
7112 A9
7113 B9
7114 C8
7115 D9
7116 D11
7117 C9
7150 F4
7151 F4
7152 I6
7153 I4
7154 I4
7155 H5
7156 H4
7157 H6
7158 F6
7159 H6
7160 F9
7161 G9
7162 F9
7163 H7
7164 H9
7165 H9
7167 I11
7168 F11

8-11

AMPLIFIER UCD BOARD - CIRCUIT DIAGRAM (PART 2)

1201 A1	2201 B2	2205 D7	2209 A8	2213 B2	3201 A4	3205 D6	3209 E6	3213 D1	3217 D1	3222 E2	3226 B8	3234 B3	3238 A7	6200 A5	6204 B9	6211 B8	7203 D7	7207 D1	7210-B E2	7210-F D9
1202 A4	2202 B1	2206 D6	2210 D3	2214 B2	3202 B4	3206 E6	3210 D7	3214 C3	3218 D1	3223 E1	3231 B3	3235 E3	3239 B8	6201 C7	6205 D2	7200 A5	7204 E1	7208 D3	7210-C C3	7211 B5
1203 E6	2203 E6	2207 D8	2211 D4	2215 B1	3203 E1	3207 D5	3211 E7	3215 D2	3219 D1	3224 D4	3232 B3	3236 D9	4201 A2	6202 C5	6206 D4	7201 B7	7205 A9	7209 E3	7210-D E9	7212 A8
1204 D6	2204 E6	2208 B9	2212 B1	2216 B2	3204 B6	3208 D6	3212 D1	3216 E4	3220 E3	3225 A7	3233 B3	3237 E9	4202 A2	6203 B8	6210 A8	7202 E7	7206 A9	7210-A D2	7210-E D8	

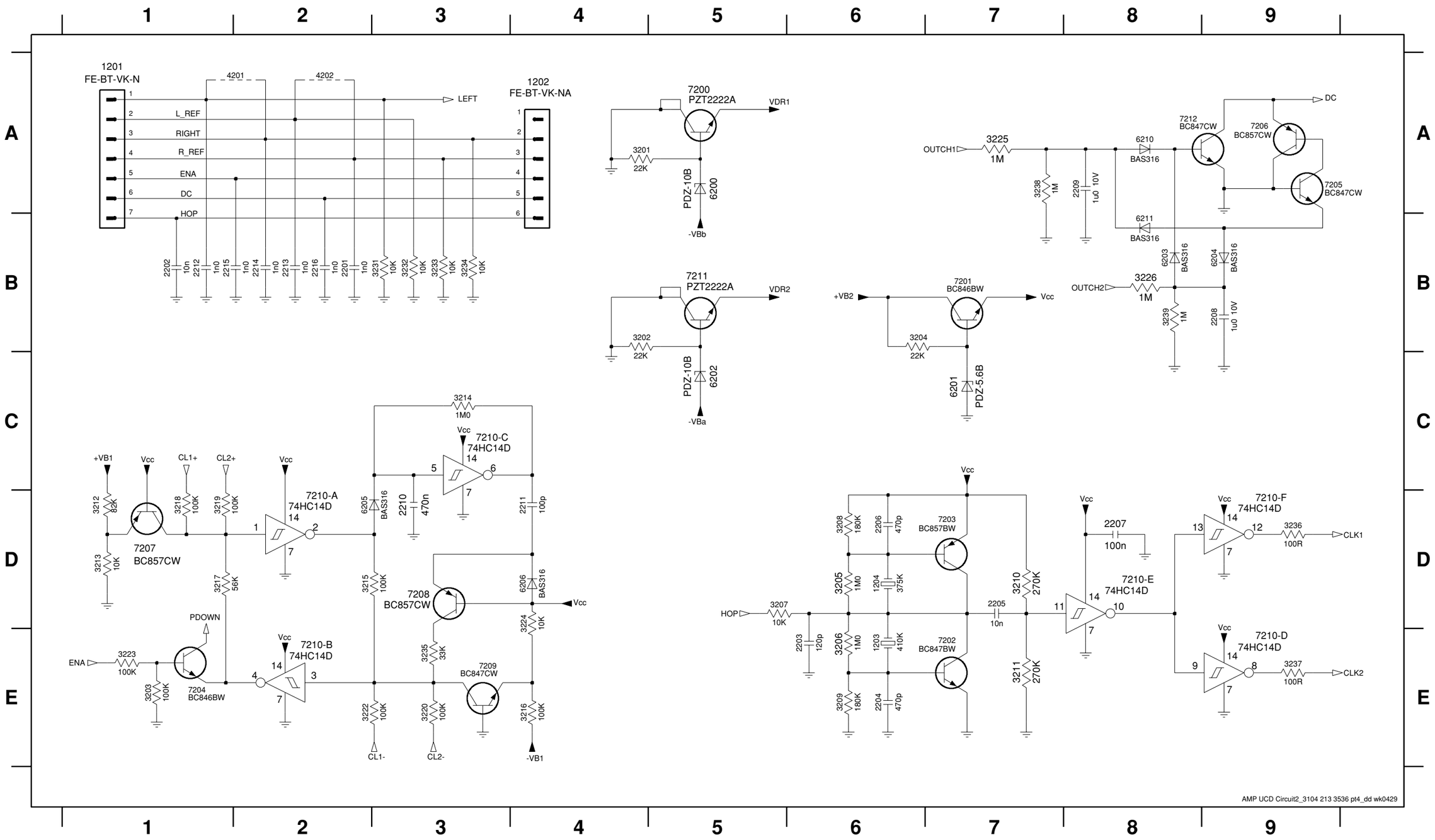

8-12

MAINS BOARD - COMPONENT LAYOUT

0705 A4	1710 A1	1909 C7	2902 B9	2920 C8	3713 A1	3903 A7	5904 A6	6705 A5	6720 B6	6916 A7	9113 A2	9941 B2	9954 D2
0708 D1	1900_B C8	2707 C1	2905 B8	2921 A9	3714 A1	3904 B9	5905 C8	6706 A8	6721 A4	7700 A5	9114 A3	9942 B2	9955 D3
1700 A4	1901_B C7	2708 A1	2907 A8	2922 A9	3715 B1	3906 A7	5929 A9	6712 B1	6722 A5	7706 A1	9115 B2	9943 B2	9956 D3
1701 A3	1902 B9	2709 B1	2908 A9	3700 A5	3716 A6	3909 A8	5930 A8	6713 B1	6723 A4	7707 A1	9116 C9	9944 B3	9957 D3
1702 A3	1903 C9	2710 A6	2909 B9	3701 A5	3717 A6	3915 B9	5931 A9	6714 B1	6900 A8	7900 B7	9117 D9	9945 B3	9958 D4
1703 A2	1904 B9	2711 A5	2913 B7	3702 A5	3718 A5	3916 A8	6700 A6	6715 B1	6902 B7	7901 A7	9901 B8	9946 B3	9960 A6
1704 A2	1905 B6	2712 A4	2916 A8	3703 A4	3719 A8	3917 A7	6701 A6	6716 A6	6905 A9	7902 B8	9902 B8	9947 B3	9961 A6
1706 D1	1906 B7	2713 B5	2917 A7	3704 A5	3900 B5	3918 A3	6702 A5	6717 A6	6906 A8	7903 A8	9906 B7	9948 B4	
1707 C1	1907 D9	2718 A9	2918 B6	3711 B1	3901 A8	3919 A4	6703 A5	6718 A5	6912 A7	9110 A1	9907 C6	9949 B4	
1709 A4	1908 A2	2900 A9	2919 C8	3712 B1	3902 A7	5901 C5	6704 A4	6719 B5	6913 A8	9111 A1	9940 B2	9953 D2	

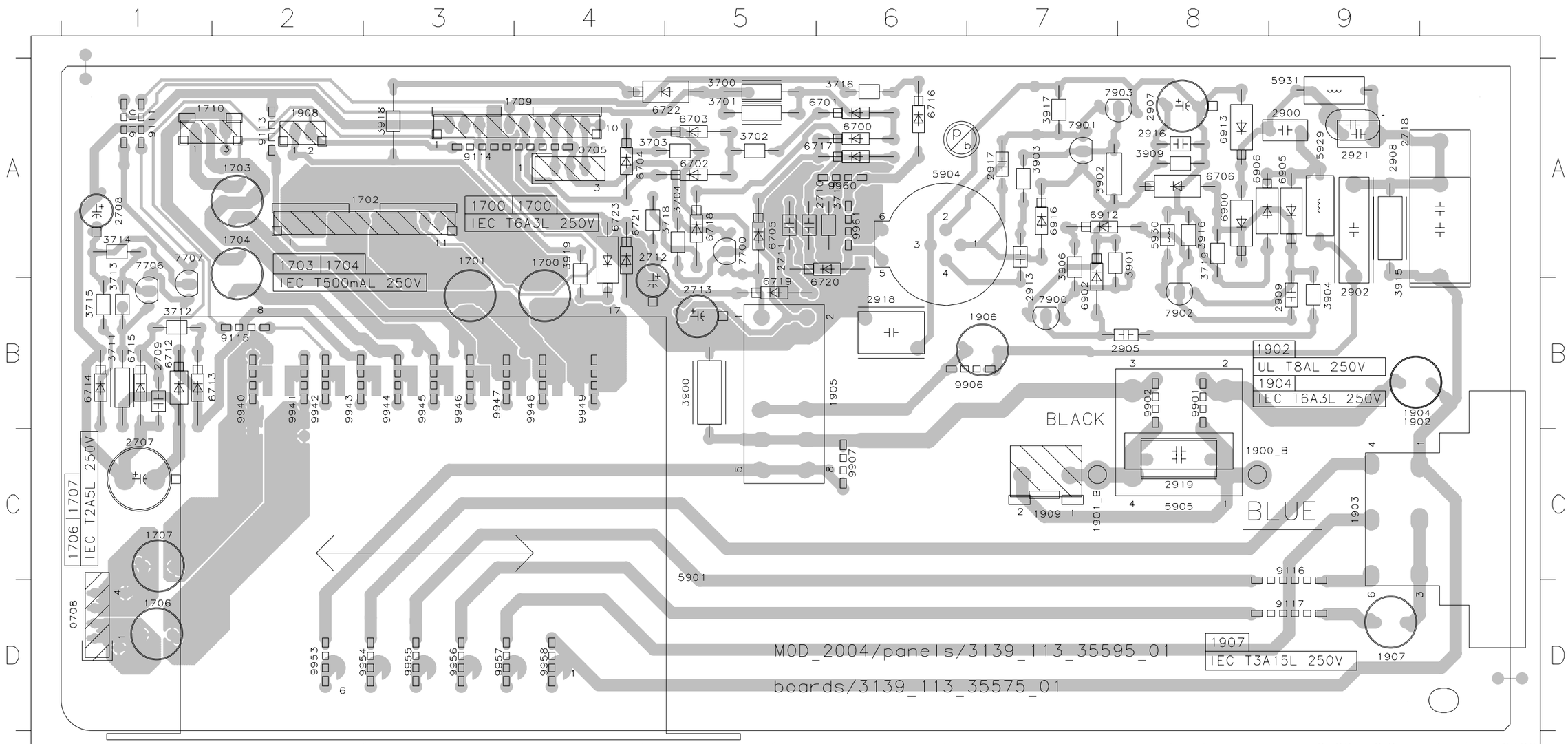

This assembly drawing shows a summary of all possible versions. For components used in a specific version see schematic diagram and respective parts list.

3139 113 3557 pt5 dd wk0429

8-13

MAINS BOARD - CIRCUIT DIAGRAM

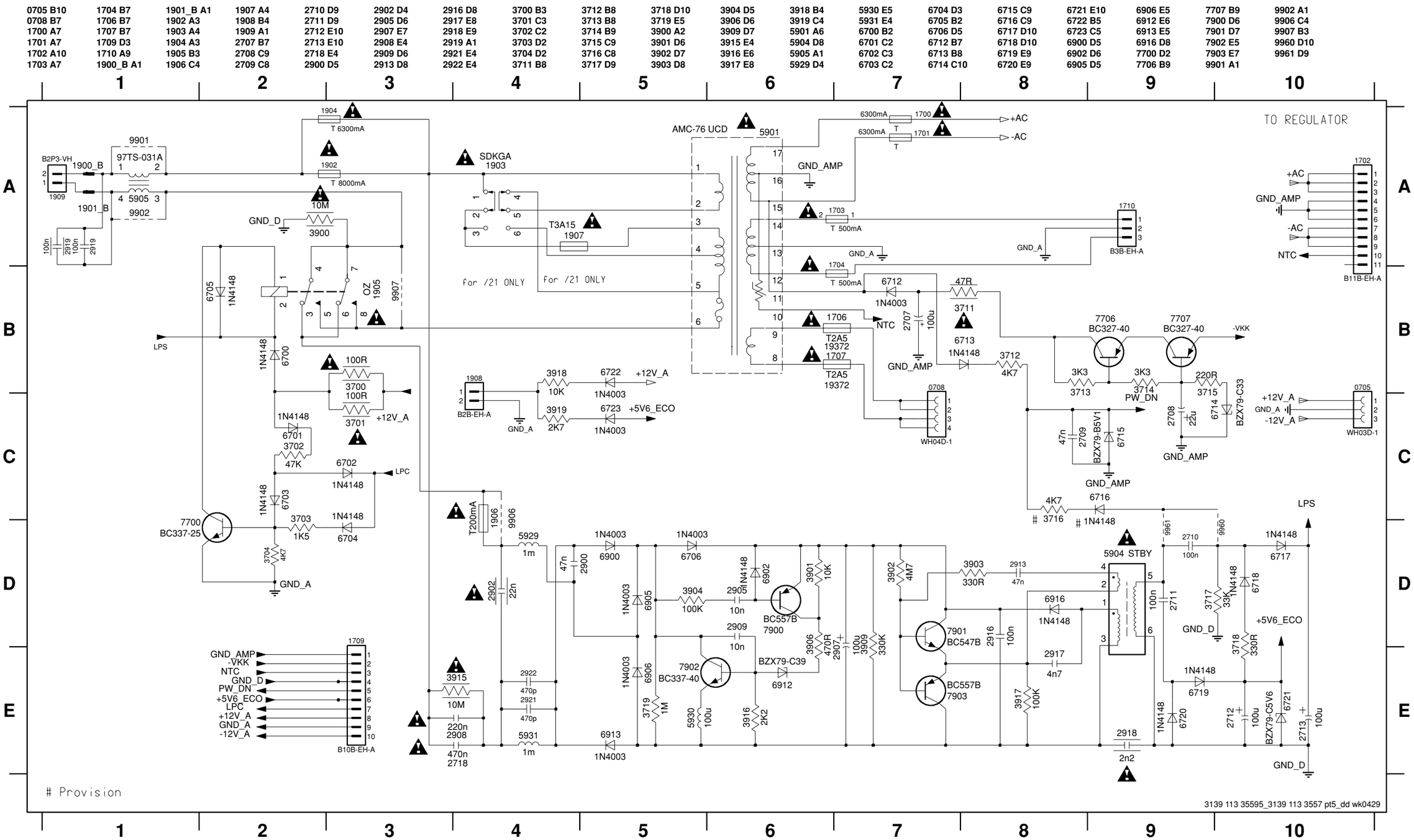

SPEAKER BOARD - COMPONENT LAYOUT

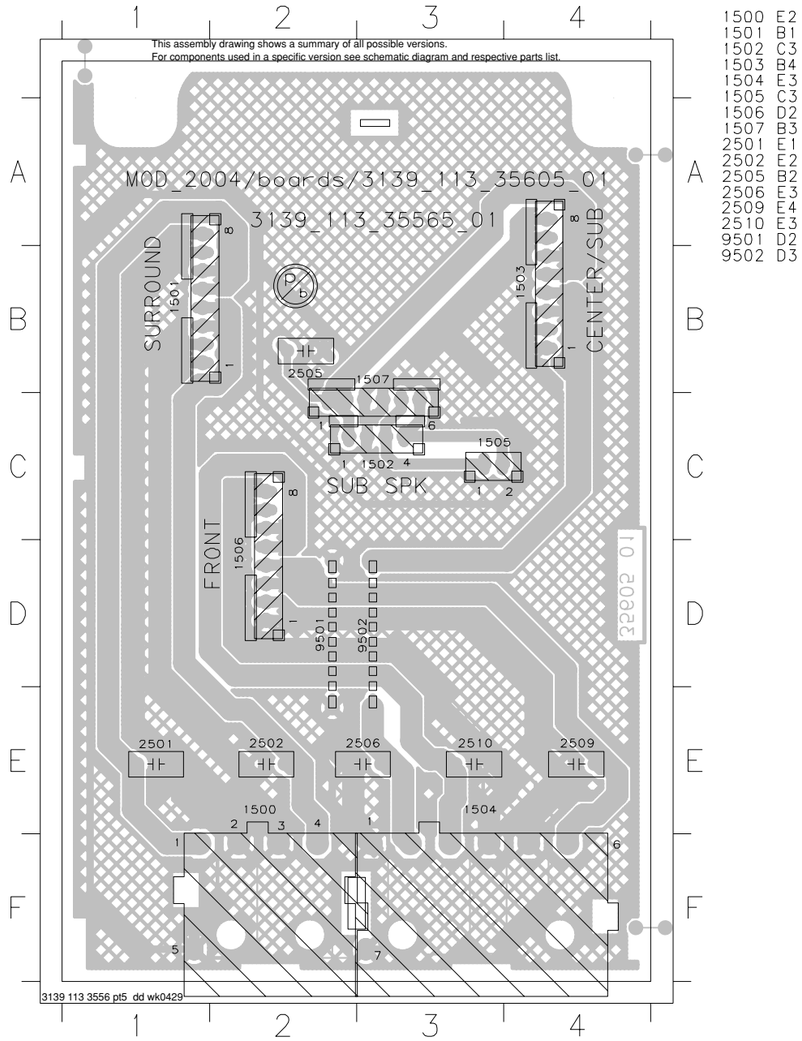

1500 E2
1501 B1
1502 C3
1503 B4
1504 E3
1505 C3
1506 D2
1507 B3
2501 E1
2502 E2
2505 B2
2506 E3
2509 E4
2510 E3
9501 D2
9502 D3

SPEAKER BOARD - CIRCUIT DIAGRAM

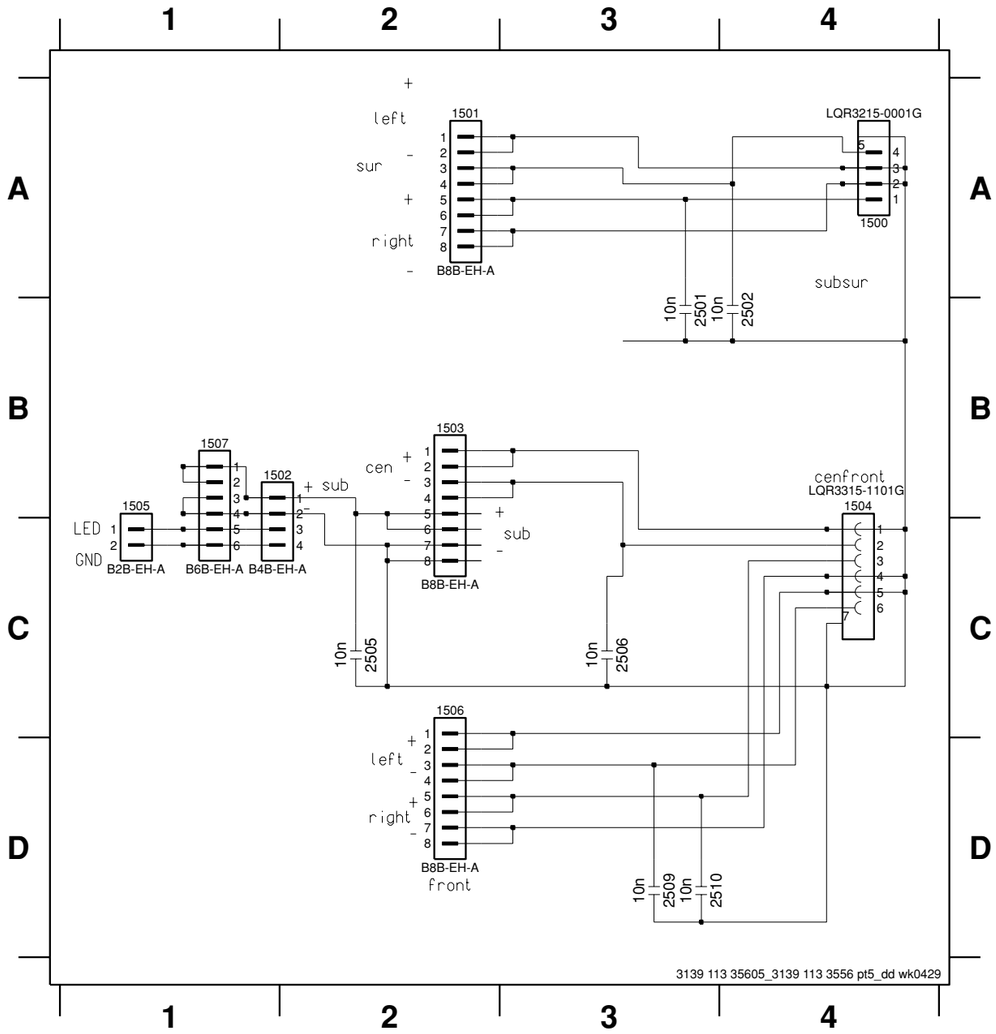

1500 A4
1501 A2
1502 B1
1503 B2
1504 B4
1505 B1
1506 C2
1507 B1
2501 B3
2502 B4
2505 C2
2506 C3
2509 D3
2510 D3

MAINS SOCKET BOARD - COMPONENT LAYOUT

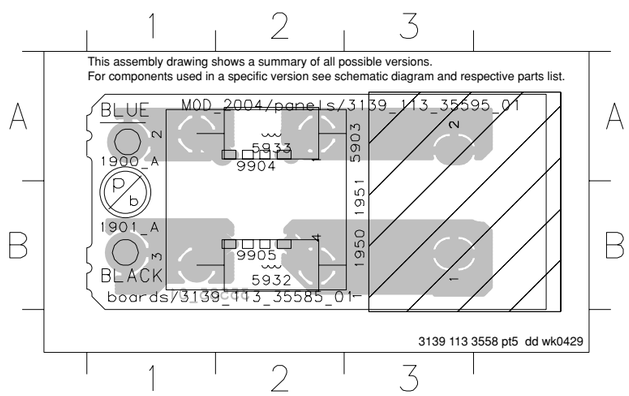

1900_A A1
1901_A B1
1950 B3
1951 B3
5903 A3
5932 B2
5933 A2
9904 A2
9905 B2

MAINS SOCKET BOARD - CIRCUIT DIAGRAM

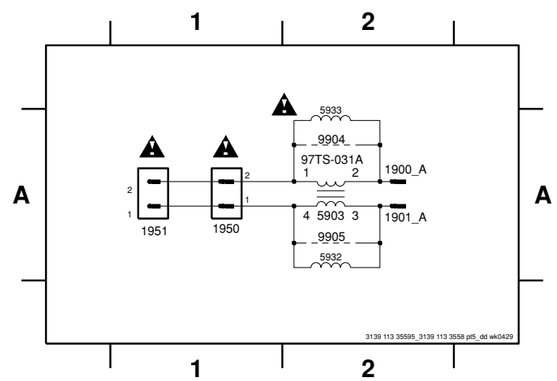

1900_A A2
1901_A A2
1950 A1
1951 A1
5903 A2
5932 A2
5933 A2
9904 A2
9905 A2

ELECTRICAL PARTS LIST - MAINS SOCKET BOARD

MISCELLANEOUS

1002	3139 118 58041		PCBAS MAINS SOCKET
1950	4822 265 31015	⚠	MAINS SOCKET

COILS & FILTERS

5903	4822 157 11628	⚠	FIL MAINS 650uH 6A 97TS B

Note : Only the parts mentioned in this list are normal service spare parts.

ELECTRICAL PARTS LIST - MAINS BOARD

MISCELLANEOUS

1001	3139 118 58071		PCBAS MAINS
1700	2422 086 11109	⚠	FUSE RAD T 6A3 250V
1701	2422 086 11109	⚠	FUSE RAD T 6A3 250V
1703	9965 000 07787	⚠	FUSE RAD LT 500MA 250V
1704	9965 000 07787	⚠	FUSE RAD LT 500MA 250V
1706	4822 071 52502	⚠	FUSE RAD LT 2A5 250V
1707	4822 071 52502	⚠	FUSE RAD LT 2A5 250V
1710	4822 267 10735		CON BM V 3P M 2.50 EH B
1903	9965 000 07789	⚠	VOLTAGE SELECTOR
1904	2422 086 11109	⚠	FUSE RAD T 6A3 250V
1905	2422 132 07519	⚠	RELAY 1P 12V 16A OZ-SS L
1907	4822 071 53152	⚠	FUSE RAD LT 3A15 250V

CAPACITORS

2707	2020 012 93741		100uF 20% 100V
2718	4822 126 13589	⚠	470nF 20% 275V
2900	4822 121 43526		47nF 5% 250V
2902	2222 336 19106	⚠	22nF 20% 275V
2918	4822 126 14497	⚠	2,2nF 20% 250V
2919	4822 121 10711		100nF 20% 275V
2919	2222 338 22104		100nF 20% 275V

RESISTORS

3700	4822 052 10101	⚠	100R 5% 0,33W
3701	4822 052 10101	⚠	100R 5% 0,33W
3711	4822 052 10479	⚠	47R 5% 0,33W
3902	4822 050 24705		4M7 1% 0,6W
3915	4822 053 21106	⚠	10M 5% 0,5W

COILS & FILTERS

5904	2422 549 45157	⚠	TRAFO STANDBY 3A1631N
5929	4822 157 53473		IND FXD 1000uH 10%
5930	4822 157 52333		IND FXD 100uH 5%
5931	4822 157 53473		IND FXD 1000uH 10%

DIODES

6700	4822 130 30621	1N4148
6701	4822 130 30621	1N4148
6702	4822 130 30621	1N4148
6703	4822 130 30621	1N4148
6704	4822 130 30621	1N4148
6705	4822 130 30621	1N4148
6706	4822 130 31878	1N4003G
6712	4822 130 31878	1N4003G
6713	4822 130 30621	1N4148
6714	4822 130 34142	BZX79-C33
6715	3198 010 55180	BZX79-B5V1
6716	4822 130 30621	1N4148
6717	4822 130 30621	1N4148
6718	4822 130 30621	1N4148
6719	4822 130 30621	1N4148
6720	4822 130 30621	1N4148
6721	4822 130 34173	BZX79-C5V6
6722	4822 130 31878	1N4003G
6723	4822 130 31878	1N4003G
6900	4822 130 31878	1N4003G
6902	4822 130 30621	1N4148
6905	4822 130 31878	1N4003G
6906	4822 130 31878	1N4003G
6912	4822 130 34145	BZX79-C39
6913	4822 130 31878	1N4003G
6916	4822 130 30621	1N4148

TRANSISTORS & INTEGRATED CIRCUITS

7700	4822 130 40981	BC337-25
7706	4822 130 41327	BC327-40
7707	4822 130 41327	BC327-40
7900	4822 130 44568	BC557B
7901	4822 130 40959	BC547B
7902	4822 130 40855	BC337-40
7903	4822 130 44568	BC557B

Note : Only the parts mentioned in this list are normal service spare parts.

ELECTRICAL PARTS LIST - REGUALTOR BOARD

MISCELLANEOUS

1306	4822 267 10953	FLEX CONNECTOR 7P
1308	4822 267 10953	FLEX CONNECTOR 7P
1310	4822 267 10953	FLEX CONNECTOR 7P

CAPACITORS

2310	3198 038 52220	2200uF 20% 50V
2312	5322 121 42661	330nF 5% 63V
2313	5322 121 42386	100nF 5% 63V
2318	5322 121 42661	330nF 5% 63V
2319	5322 121 42386	100nF 5% 63V
2320	5322 121 42661	330nF 5% 63V
2321	5322 121 42386	100nF 5% 63V
2322	5322 121 42578	100nF 5% 250V
2323	5322 121 42578	100nF 5% 250V
2324	2022 020 00737	6800uF 20% 50V
2325	5322 121 42578	100nF 5% 250V
2326	2022 020 00737	6800uF 20% 50V
2327	5322 121 42578	100nF 5% 250V
2328	5322 121 42578	100nF 5% 250V
2329	2022 020 00782	6800uF 20% 35V
2339	5322 121 42386	100nF 5% 63V
2340	5322 121 42386	100nF 5% 63V
2341	5322 121 42386	100nF 5% 63V
2373	4822 124 80061	1000uF 20% 25V

RESISTORS

3326	4822 052 10568	⚠	5R6 5% 0,33W
3328	2322 615 33103		NTC SM 0603 0W125 10K 5%
3331	2322 187 53123		RST MFLM SFR16 A 12K 5%
3344	2322 187 53123		RST MFLM SFR16 A 12K 5%

COILS & FILTERS

5300	2422 536 00838	IND FXD 16RHBP 100uH 10%

DIODES

6306	4822 130 10871	⚠	BYV27-200
6308	4822 130 11397		BAS316
6309	4822 130 11397		BAS316
6310	4822 130 11397		BAS316
6311	4822 130 11397		BAS316
6312	4822 130 11397		BAS316
6313	9322 197 92682	⚠	BRIDGE GBJ10D
6314	4822 130 83302	⚠	BRIDGE GBU4D
6315	4822 130 34174	⚠	BZX79-C4V7
6316	4822 130 31878	⚠	1N4003G
6317	4822 130 31878	⚠	1N4003G
6318	4822 130 31878	⚠	1N4003G
6319	4822 130 31878	⚠	1N4003G
6320	4822 130 83206		BZX79-B5V6

TRANSISTORS & INTEGRATED CIRCUITS

7300	4822 209 30095		LM833D
7301	4822 209 30095		LM833D
7302	4822 209 30095		LM833D
7303	4822 209 30095		LM833D
7304	4822 209 30095		LM833D
7305	4822 209 30095		LM833D
7314	9322 196 34682	⚠	IC LM2576TV-ADJ
7315	4822 209 81726	⚠	IC L7812CV
7317	4822 130 60373		BC857B
7318	5322 130 60159		BC847B
7319	5322 130 60159		BC847B
7320	5322 130 60159		BC847B
7321	9322 131 68687	⚠	IC L7912CP
7322	4822 209 81726	⚠	IC L7812CV
7323	4822 130 41246		BC327-25
7324	5322 130 60159		BC847B
7325	5322 130 60159		BC847B
7326	5322 130 60159		BC847B
7327	5322 130 60159		BC847B
7328	5322 130 60159		BC847B
7329	5322 130 60159		BC847B

Note : Only the parts mentioned in this list are normal service spare parts.

ELECTRICAL PARTS LIST - SPEAKER BOARD

MISCELLANEOUS

1500	2422 025 18515	Speaker Socket 4P Grey/Blue
1504	2422 025 18518	Speaker Socket 6P Green/ Red/White

CAPACITORS

2501	4822 121 41857	10nF 5% 250V
2502	4822 121 41857	10nF 5% 250V
2505	4822 121 41857	10nF 5% 250V
2506	4822 121 41857	10nF 5% 250V
2509	4822 121 41857	10nF 5% 250V
2510	4822 121 41857	10nF 5% 250V

Note : Only the parts mentioned in this list are normal service spare parts.

ELECTRICAL PARTS LIST - AMPLIFIER UCD BOARD

MISCELLANEOUS

0003	3104 214 39321	TO-220 HOLDER
0004	3104 214 39331	SPACER
1201	4822 267 10953	FLEX CONNECTOR 7P
1203	2422 540 98578	RES CER 410kHz
1204	2422 540 98552	RES CER 375kHz

CAPACITORS

2114	3198 026 51020	1000uF 20% 50V
2120	2238 606 11536	100pF 5% 100V
2123	3198 026 51020	1000uF 20% 50V
2127	2238 606 11536	100pF 5% 100V
2128	5322 121 42498	680nF 5% 63V
2160	2238 606 11536	100pF 5% 100V
2163	2238 606 11536	100pF 5% 100V
2164	3198 026 51020	1000uF 20% 50V
2168	3198 026 51020	1000uF 20% 50V
2172	5322 121 42498	680nF 5% 63V

RESISTORS

3122	4822 101 11382	RTRM CAR LIN 220R
3131	2122 118 06384	RST SM1218 LPRC201 R047 5%
3141	2122 118 06384	RST SM1218 LPRC201 R047 5%
3145	2122 663 00025	⚠ PTC SM 0805 40V 3k9 10%
3172	4822 101 11382	RTRM CAR LIN 220R
3182	2122 118 06384	RST SM1218 LPRC201 R047 5%
3184	2122 118 06384	RST SM1218 LPRC201 R047 5%
3188	2122 663 00025	⚠ PTC SM 0805 40V 3k9 10%
3190	4822 117 12063	⚠ NTC DC 0W5 S 10k 5%
3195	2120 611 00023	NTC SM 0603 0W1 4k7 5%
3195	2322 615 33472	NTC SM 0603 0W125 4k7 5%
3196	2120 611 00023	NTC SM 0603 0W1 4k7 5%
3196	2322 615 33472	NTC SM 0603 0W125 4k7 5%
3197	2120 611 00023	NTC SM 0603 0W1 4k7 5%
3197	2322 615 33472	NTC SM 0603 0W125 4k7 5%
3198	2120 611 00023	NTC SM 0603 0W1 4k7 5%
3198	2322 615 33472	NTC SM 0603 0W125 4k7 5%

COILS & FILTERS

5100	4822 157 11411	IND FXD BEAD EMI 100MHz 83R
5102	4822 157 11411	IND FXD BEAD EMI 100MHz 83R
5105	3104 218 15671	IND FXD SC4684-145 PM1
5151	4822 157 11411	IND FXD BEAD EMI 100MHz 83R
5152	4822 157 11411	IND FXD BEAD EMI 100MHz 83R
5155	3104 218 15671	IND FXD SC4684-145 PM1

DIODES

6101	4822 130 11397	BAS316
6102	4822 130 11397	BAS316
6103	3198 020 55680	DIO REG SM PDZ5.6B
6104	9322 198 95685	DIO SIG SM 1SS370
6105	9322 198 95685	DIO SIG SM 1SS370
6106	5322 130 34331	DIO SIG SM BAV70W
6107	4822 130 11397	BAS316
6108	9340 548 61115	DIO REG SM PDZ12B
6109	5322 130 34331	DIO SIG SM BAV70W
6110	4822 130 11397	BAS316
6151	4822 130 11397	BAS316
6152	4822 130 11397	BAS316
6153	5322 130 34331	DIO SIG SM BAV70W
6154	9340 548 61115	DIO REG SM PDZ12B
6155	4822 130 11397	BAS316
6156	3198 020 55680	DIO REG SM PDZ5.6B
6157	9322 198 95685	DIO SIG SM 1SS370
6158	9322 198 95685	DIO SIG SM 1SS370
6159	5322 130 34331	DIO SIG SM BAV70W
6160	4822 130 11397	BAS316
6200	4822 130 11551	DIO REG SM PDZ10B
6201	3198 020 55680	DIO REG SM PDZ5.6B
6202	4822 130 11551	DIO REG SM PDZ10B
6203	4822 130 11397	BAS316
6204	4822 130 11397	BAS316
6205	4822 130 11397	BAS316
6206	4822 130 11397	BAS316
6210	4822 130 11397	BAS316
6211	4822 130 11397	BAS316

TRANSISTORS & INTEGRATED CIRCUITS

7100	9340 218 20135	TRA SIG SM BC856BW
7101	4822 130 41691	TRA SIG BC556B
7102	9340 218 60115	TRA SIG SM BC857CW
7103	9340 217 80115	TRA SIG SM BC847CW
7103	9340 217 80115	TRA SIG SM BC847CW
7104	9340 217 80115	TRA SIG SM BC847CW
7104	9340 217 80115	TRA SIG SM BC847CW
7105	9340 218 20135	TRA SIG SM BC856BW
7106	9340 217 80115	TRA SIG SM BC847CW
7106	9340 217 80115	TRA SIG SM BC847CW
7107	9340 217 80115	TRA SIG SM BC847CW
7107	9340 217 80115	TRA SIG SM BC847CW
7108	4822 130 43233	TRA SIG 2SC2240
7109	9340 217 80115	TRA SIG SM BC847CW
7109	9340 217 80115	TRA SIG SM BC847CW
7110	9340 218 20135	TRA SIG SM BC856BW
7111	9340 218 60115	TRA SIG SM BC857CW
7112	9322 173 29687	FET POW STP14NF12FP
7113	9322 198 96685	TRA SIG SM 2SA1954B
7114	9340 218 60115	TRA SIG SM BC857CW
7115	9322 198 96685	TRA SIG SM 2SA1954B
7116	9340 217 40135	TRA SIG SM BC846BW
7117	9322 173 29687	FET POW STP14NF12FP
7150	9340 218 60115	TRA SIG SM BC857CW
7151	4822 130 41691	TRA SIG BC556B
7152	9340 217 80115	TRA SIG SM BC847CW
7152	9340 217 80115	TRA SIG SM BC847CW
7153	9340 217 80115	TRA SIG SM BC847CW
7153	9340 217 80115	TRA SIG SM BC847CW
7154	9340 217 80115	TRA SIG SM BC847CW
7154	9340 217 80115	TRA SIG SM BC847CW
7155	9340 217 80115	TRA SIG SM BC847CW
7155	9340 217 80115	TRA SIG SM BC847CW
7156	9340 218 20135	TRA SIG SM BC856BW
7157	9340 218 20135	TRA SIG SM BC856BW
7158	4822 130 43233	TRA SIG 2SC2240
7159	9340 217 80115	TRA SIG SM BC847CW
7159	9340 217 80115	TRA SIG SM BC847CW
7160	9340 218 60115	TRA SIG SM BC857CW
7161	9322 198 96685	TRA SIG SM 2SA1954B
7162	9322 173 29687	FET POW STP14NF12FP
7163	9340 218 60115	TRA SIG SM BC857CW
7164	9322 198 96685	TRA SIG SM 2SA1954B
7165	9322 173 29687	FET POW STP14NF12FP
7167	9340 217 40135	TRA SIG SM BC846BW
7168	9340 218 20135	TRA SIG SM BC856BW
7200	9339 753 30135	TRA POW SM PZT2222A
7201	9340 217 40135	TRA SIG SM BC846BW
7202	3198 010 42310	TRA SIG SM BC847BW
7203	3198 010 42320	TRA SIG SM BC857BW
7204	9340 217 40135	TRA SIG SM BC846BW
7205	9340 217 80115	TRA SIG SM BC847CW
7205	9340 217 80115	TRA SIG SM BC847CW
7206	9340 218 60115	TRA SIG SM BC857CW
7207	9340 218 60115	TRA SIG SM BC857CW
7208	9340 218 60115	TRA SIG SM BC857CW
7209	9340 217 80115	TRA SIG SM BC847CW
7209	9340 217 80115	TRA SIG SM BC847CW
7210	5322 209 11548	IC SM 74HC14D
7211	9339 753 30135	TRA POW SM PZT2222A
7212	9340 217 80115	TRA SIG SM BC847CW
7212	9340 217 80115	TRA SIG SM BC847CW

Note : Only the parts mentioned in this list are normal service spare parts.

8-16

ELECTRICAL PARTS LIST - AMPLIFIER UCD BOARD

MODULE SD6.3 ST AV2

TABLE OF CONTENTS

SD6.3 ST AV2 Board - Top View Layout 9-2
SD6.3 ST AV2 Board - Bottom View Layout 9-3
SD6.3 ST AV2 Board - Circuit Diagram (Part 1) 9-4
SD6.3 ST AV2 Board - Circuit Diagram (Part 2) 9-5
Exploded View & parts list 9-6
Electrical parts list 9-7

9-2

SD6.3 ST AV2 BOARD - TOP VIEW LAYOUT

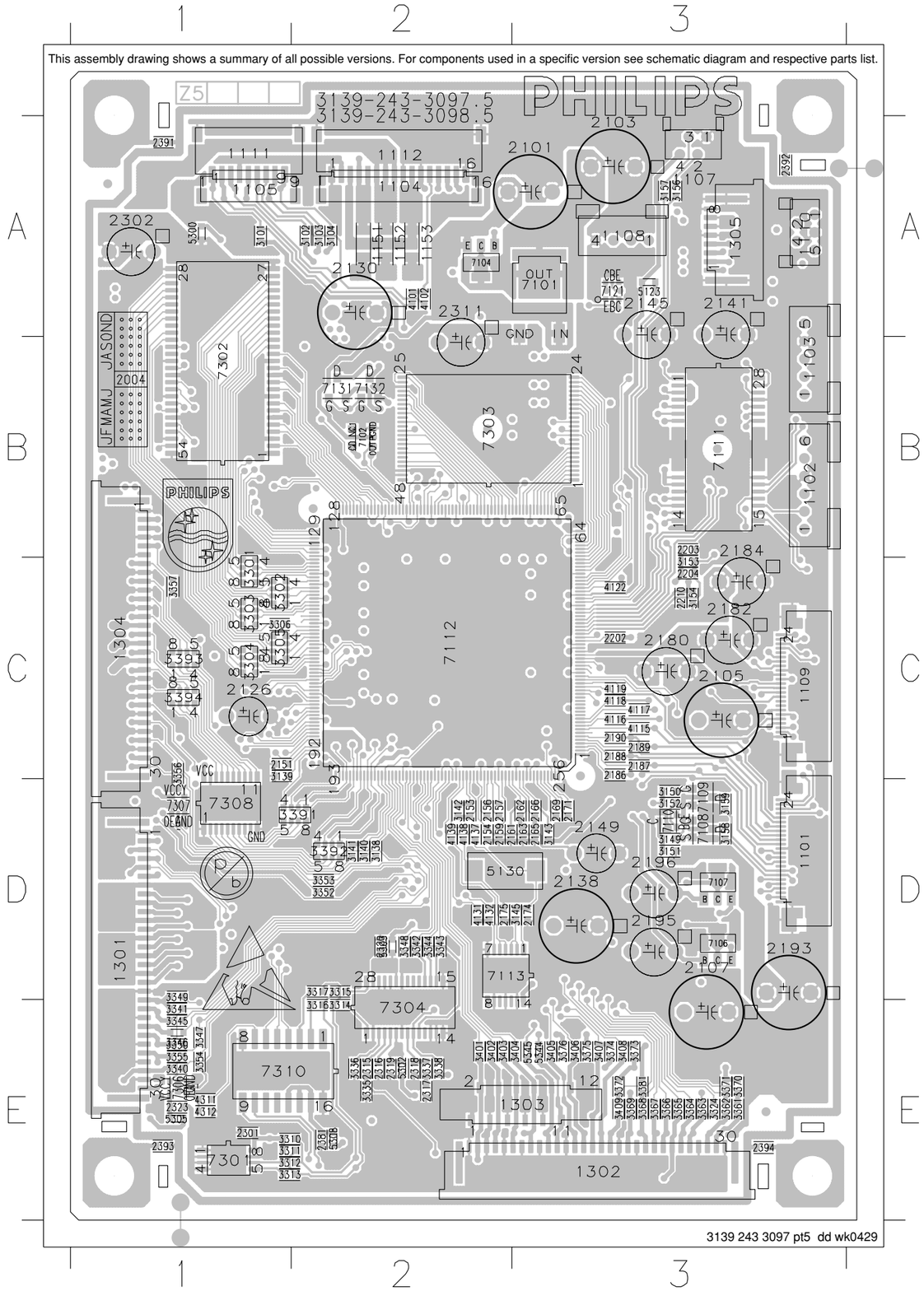

1101	D3	2317	E2	3355	E1	7110	D3
1102	B3	2318	E2	3356	C1	7111	B3
1103	B3	2319	E2	3357	C1	7112	C2
1104	A2	2320	D2	3361	E3	7113	D2
1105	A1	2323	E1	3362	E3	7121	A3
1107	A3	2381	E2	3363	E3	7131	B2
1108	A3	2391	A1	3364	E3	7132	B2
1109	C3	2392	A3	3365	E3	7301	E1
1110	A3	2393	E1	3366	E3	7302	B1
1111	A1	2394	E3	3367	E3	7303	B2
1112	A2	3101	A1	3368	E3	7304	E2
1151	A2	3102	A2	3369	E3	7306	E1
1152	A2	3103	A2	3370	E3	7307	D1
1153	A2	3104	A2	3371	E3	7308	D1
1301	D1	3138	D2	3372	E3	7310	E1
1302	E3	3139	C1	3373	E3		
1303	E3	3140	D2	3374	E3		
1304	C1	3141	D2	3375	E3		
1305	A3	3142	D2	3376	E3		
2101	A3	3143	D3	3381	E3		
2103	A3	3145	D3	3391	D2		
2105	C3	3149	D3	3392	D2		
2107	D3	3150	D3	3393	C1		
2126	C1	3151	D3	3394	C1		
2130	A2	3152	D3	3401	E2		
2138	D3	3153	C3	3402	E2		
2141	A3	3154	C3	3403	E2		
2145	A3	3156	A3	3404	E3		
2149	D3	3157	A3	3405	E3		
2151	C1	3158	D3	3406	E3		
2153	D2	3159	D3	3407	E3		
2154	D2	3301	C1	3408	E3		
2156	D2	3302	C1	3409	E3		
2157	D2	3303	C1	4101	A2		
2159	D2	3304	C1	4102	A2		
2161	D2	3305	C1	4115	C3		
2162	D3	3306	C1	4116	C3		
2163	D3	3310	E1	4117	C3		
2165	D3	3311	E1	4118	C3		
2166	D3	3312	E1	4119	C3		
2169	D3	3313	E1	4122	C3		
2171	D3	3314	E2	4131	D2		
2174	D3	3315	D2	4132	D2		
2175	D2	3316	E2	4137	D2		
2180	C3	3317	D2	4138	D2		
2182	C3	3324	E3	4139	D2		
2184	B3	3335	E2	4311	E1		
2186	C3	3336	E2	4312	E1		
2187	C3	3337	E2	5123	A3		
2188	C3	3338	E2	5130	D2		
2189	C3	3340	E1	5300	A1		
2190	C3	3341	E1	5302	E2		
2193	D3	3342	D2	5303	D2		
2195	D3	3343	D2	5305	E1		
2196	D3	3344	D2	5308	E2		
2202	C3	3345	E1	5344	E3		
2203	B3	3346	E1	5345	E3		
2204	C3	3347	E1	7101	A3		
2210	C3	3348	D2	7102	B2		
2301	E1	3349	D1	7104	A2		
2302	A1	3350	E1	7106	D3		
2311	A2	3352	D2	7107	D3		
2315	E2	3353	D2	7108	D3		
2316	E2	3354	E1	7109	D3		

9-3

SD6.3 ST AV2 BOARD - BOTTOM VIEW LAYOUT

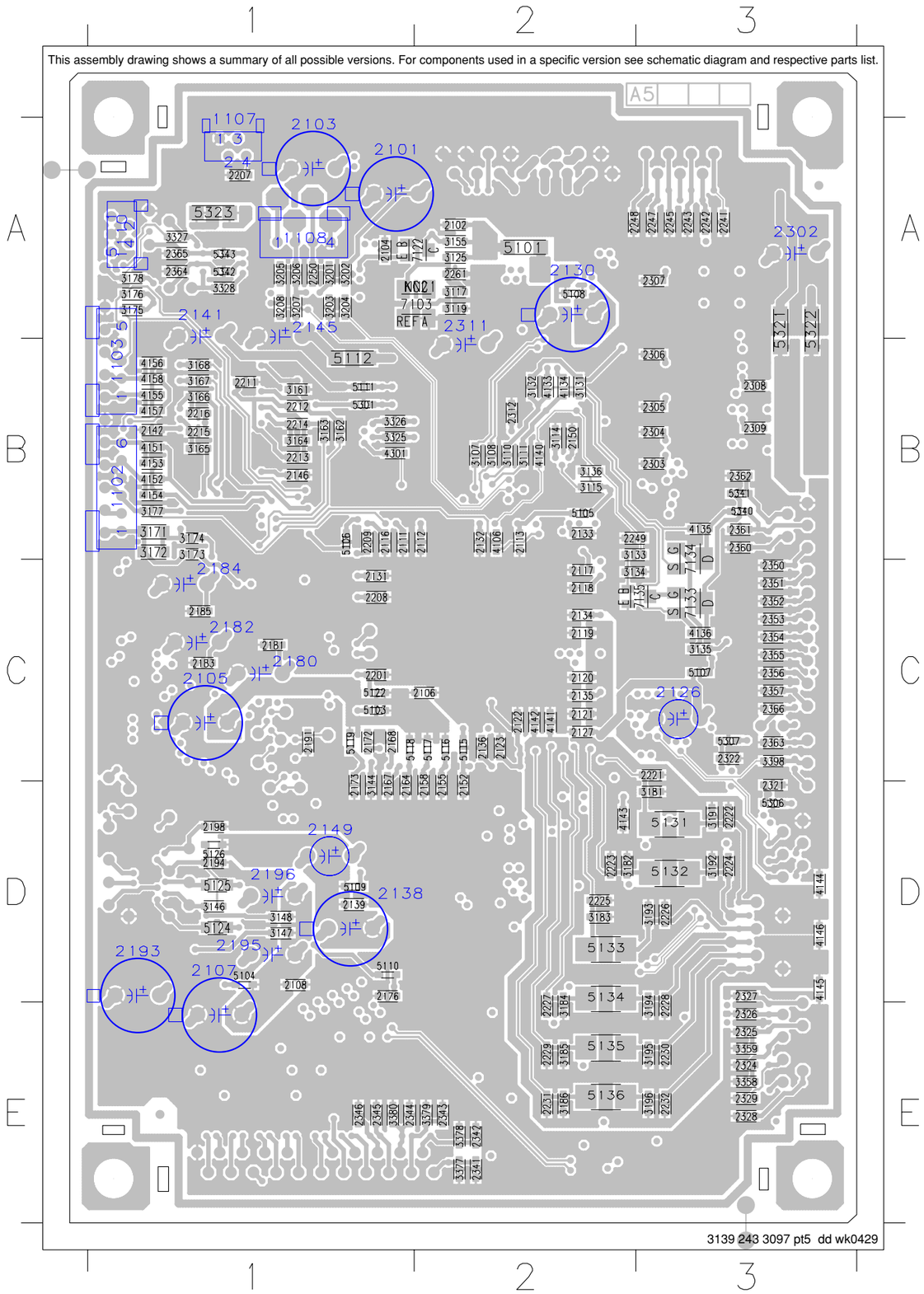

1102	B1	2102	A2	2242	A3	3155	A2	4155	B1
1103	B1	2104	A1	2243	A3	3161	B1	4156	B1
1107	A1	2106	C2	2245	A3	3162	B1	4157	B1
1108	A1	2108	D1	2247	A3	3163	B1	4158	B1
1110	A1	2111	B1	2248	A2	3164	B1	4301	B1
2101	A1	2112	B2	2249	B2	3165	B1	5101	A2
2103	A1	2113	B2	2250	A1	3166	B1	5103	C1
2105	C1	2116	B1	2261	A2	3167	B1	5104	D1
2107	D1	2117	C2	2303	B3	3168	B1	5105	B2
2126	C3	2118	C2	2304	B3	3171	B1	5106	B1
2130	A2	2119	C2	2305	B3	3172	B1	5107	C3
2138	D1	2120	C2	2306	B3	3173	B1	5108	A2
2141	A1	2121	C2	2307	A3	3174	B1	5109	D1
2145	A1	2122	C2	2308	B3	3175	A1	5110	D1
2149	D1	2123	C2	2309	B3	3176	A1	5111	B1
2180	C1	2127	C2	2312	B2	3177	B1	5112	B1
2182	C1	2131	C1	2321	D3	3178	A1	5115	C2
2184	B1	2132	B2	2322	C3	3181	D3	5116	C2
2193	D1	2133	B2	2324	E3	3182	D2	5117	C2
2195	D1	2134	C2	2325	E3	3183	D2	5118	C1
2196	D1	2135	C2	2326	E3	3184	E2	5119	C1
2302	A3	2136	C2	2327	D3	3185	E2	5122	C1
2311	A2	2139	D1	2328	E3	3186	E2	5124	D1
		2142	B1	2329	E3	3191	D3	5125	D1
		2146	B1	2341	E2	3192	D3	5126	D1
		2150	B2	2342	E2	3193	D3	5131	D3
		2152	D2	2343	E2	3194	E3	5132	D3
		2155	D2	2344	E1	3195	E3	5133	D2
		2158	D2	2345	E1	3196	E3	5134	D2
		2164	D1	2346	E1	3201	A1	5135	E2
		2167	D1	2350	C3	3202	A1	5136	E2
		2168	C1	2351	C3	3203	A1	5301	B1
		2172	C1	2352	C3	3204	A1	5306	D3
		2173	D1	2353	C3	3205	A1	5307	C3
		2176	D1	2354	C3	3206	A1	5321	A3
		2181	C1	2355	C3	3207	A1	5322	A3
		2183	C1	2356	C3	3208	A1	5323	A1
		2185	C1	2357	C3	3325	B1	5340	B3
		2191	C1	2360	B3	3326	B1	5341	B3
		2194	D1	2361	B3	3327	A1	5342	A1
		2198	D1	2362	B3	3328	A1	5343	A1
		2201	C1	2363	C3	3358	E3	7103	A2
		2207	A1	2364	A1	3359	E3	7122	A2
		2208	C1	2365	A1	3377	E2	7133	C3
		2209	B1	2366	C3	3378	E2	7134	B3
		2211	B1	3107	B2	3379	E2	7135	C3
		2212	B1	3108	B2	3380	E1		
		2213	B1	3110	B2	3398	C3		
		2214	B1	3111	B2	4106	B2		
		2215	B1	3114	B2	4133	B2		
		2216	B1	3115	B2	4134	B2		
		2221	C3	3117	A2	4135	B3		
		2222	D3	3119	A2	4136	C3		
		2223	D2	3125	A2	4140	B2		
		2224	D3	3131	B2	4141	C2		
		2225	D2	3132	B2	4142	C2		
		2226	D3	3133	B2	4143	D2		
		2227	E2	3134	C2	4144	D3		
		2228	E3	3135	C3	4145	D3		
		2229	E2	3136	B2	4146	D3		
		2230	E3	3144	D1	4151	B1		
		2231	E2	3146	D1	4152	B1		
		2232	E3	3147	D1	4153	B1		
		2241	A3	3148	D1	4154	B1		

9-4

SD6.3 ST AV2 BOARD - CIRCUIT DIAGRAM (PART 1)

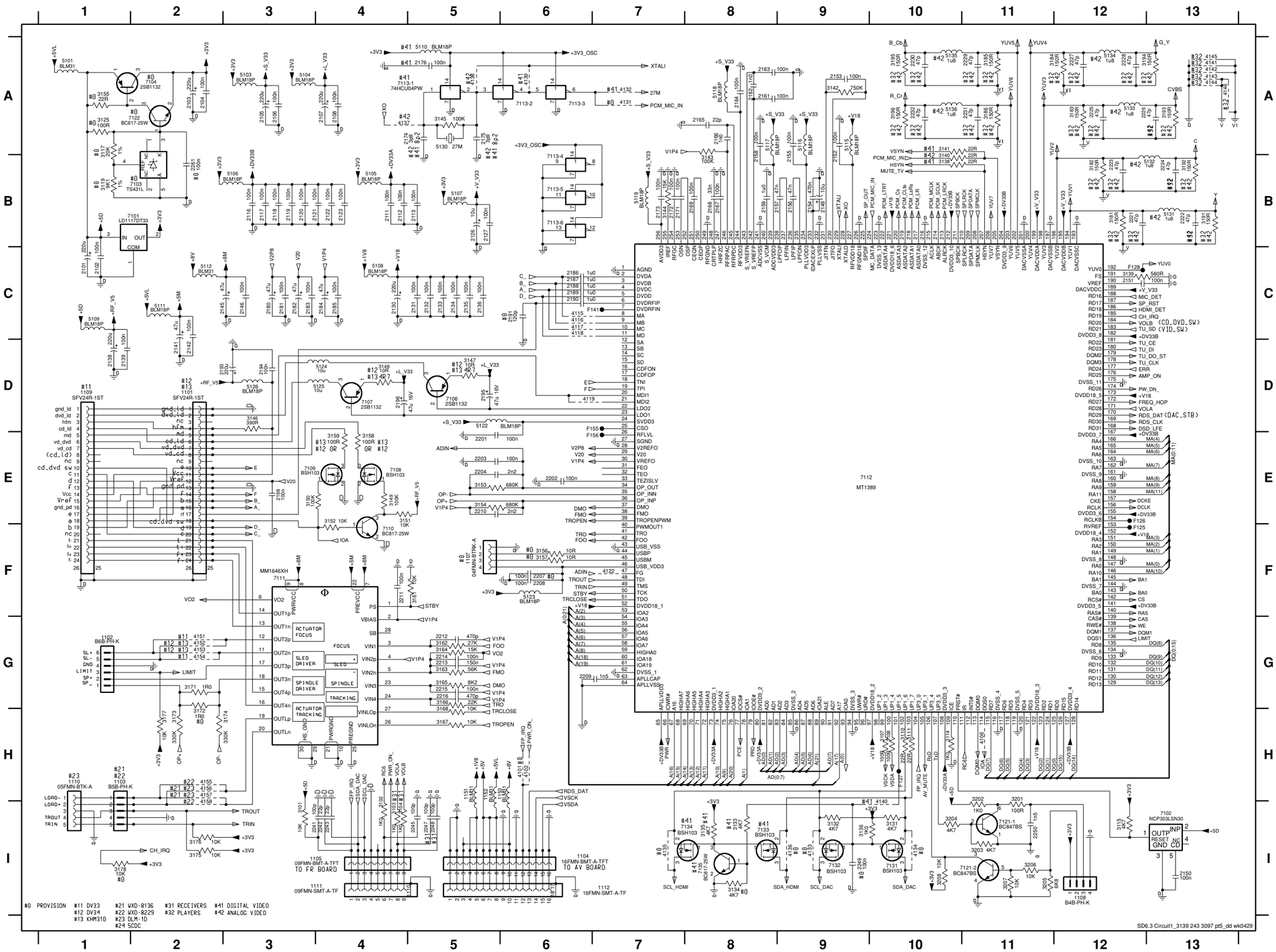

#0 PROVISION
#11 DV33
#12 DV34
#13 KHM310
#21 WXD-8136
#22 WXD-8229
#23 DLM-10
#24 5CDC
#31 RECEIVERS
#32 PLAYERS
#41 DIGITAL VIDEO
#42 ANALOG VIDEO

1101 D2	2241 I3	4157 H2
1102 G1	2242 I4	4158 I2
1103 H1	2243 I4	5101 A1
1104 I6	2245 I5	5103 A3
1105 I4	2247 I5	5104 A3
1107 F5	2248 I5	5105 B4
1108 I12	2249 I9	5106 B3
1109 D1	2250 I11	5107 B5
1110 H1	2261 B2	5108 C4
1111 I4	3101 I3	5109 C1
1112 I7	3102 I4	5110 A5
1151 H5	3103 I4	5111 C2
1152 H5	3104 I4	5112 C2
1153 H6	3107 H10	5115 A9
2101 C1	3108 H10	5116 A9
2102 C1	3110 H10	5117 A8
2103 A2	3111 H10	5118 A8
2104 A2	3114 H10	5119 B7
2105 A3	3115 I12	5122 D5
2106 A3	3117 A1	5123 F6
2107 A4	3119 B1	5124 D4
2108 A4	3125 A1	5125 D4
2111 B4	3131 I10	5126 D3
2112 B4	3132 I9	5130 A5
2113 B5	3133 I8	5131 B13
2116 B3	3134 I8	5132 B13
2117 B3	3135 I8	5133 A12
2118 B3	3136 I9	5134 A12
2119 B3	3138 B10	5135 A10
2120 B3	3139 C12	5136 A10
2121 B4	3140 B10	7101 B2
2122 B4	3141 A10	7102 I13
2123 B4	3142 A9	7103 B1
2126 B5	3143 B8	7104 A2
2127 B5	3144 B7	7106 D5
2130 C4	3145 A5	7107 D4
2131 C5	3146 D3	7108 E4
2132 C5	3147 D5	7109 E3
2133 C5	3148 D4	7110 F4
2134 C5	3149 E4	7111 F3
2135 C5	3150 E3	7112 E9
2136 C5	3151 E4	7113-1 A4
2138 D1	3152 E4	7113-2 A6
2139 D1	3153 E5	7113-3 A6
2141 D2	3154 E5	7113-4 B6
2142 D2	3155 A1	7113-5 B6
2145 C3	3156 F6	7113-6 B6
2146 C3	3157 F6	7121-1 I11
2149 B9	3158 E4	7121-2 I11
2150 I13	3159 E4	7122 A1
2151 C12	3161 F5	7131 I10
2152 B9	3162 G5	7132 I9
2153 A9	3163 G5	7133 I8
2154 B9	3164 G5	7134 I7
2155 B9	3165 G5	7135 I8
2156 B9	3166 G5	F125 F12
2157 B9	3167 H5	F126 E12
2158 B8	3168 H5	F127 H10
2159 B8	3171 G2	F128 C12
2161 A8	3172 H2	F141 C7
2162 A8	3173 H2	F155 D7
2163 A8	3174 H3	F156 E7
2164 A8	3175 I2	
2165 A8	3176 I2	
2166 A8	3177 H2	
2167 B8	3178 I1	
2168 B8	3181 B12	
2169 B8	3182 B12	
2171 B7	3183 A12	
2172 B7	3184 A11	
2173 B7	3185 A11	
2174 A5	3186 A11	
2175 A5	3191 B13	
2176 A5	3192 B13	
2180 C3	3193 A13	
2181 C3	3194 A12	
2182 C3	3195 A10	
2183 C3	3196 A10	
2184 C4	3201 H11	
2185 C4	3202 H11	
2186 C6	3203 I11	
2187 C6	3204 I10	
2188 C6	3205 I11	
2189 C6	3206 I11	
2190 C6	3207 I11	
2191 C6	3208 I10	
2193 D3	4101 H6	
2194 D3	4102 H6	
2195 D5	4106 H11	
2196 D4	4115 C6	
2198 E3	4116 C6	
2201 E5	4117 C6	
2202 E6	4118 C6	
2203 E5	4119 D6	
2204 E5	4122 F7	
2207 F6	4131 A7	
2208 F6	4132 A7	
2209 G6	4133 I9	
2210 E5	4134 I10	
2211 F4	4135 I7	
2212 G5	4136 I9	
2213 G5	4137 A4	
2214 G5	4138 A5	
2215 G5	4139 A6	
2216 G5	4140 I10	
2221 B12	4141 A13	
2222 B13	4142 A13	
2223 B12	4143 A13	
2224 B13	4144 A13	
2225 A12	4145 A13	
2226 A12	4146 A13	
2227 A12	4151 G2	
2228 A12	4152 G2	
2229 A11	4153 G2	
2230 A10	4154 G2	
2231 A11	4155 H2	
2232 A10	4156 H2	

9-5

SD6.3 ST AV2 BOARD - CIRCUIT DIAGRAM (PART 2)

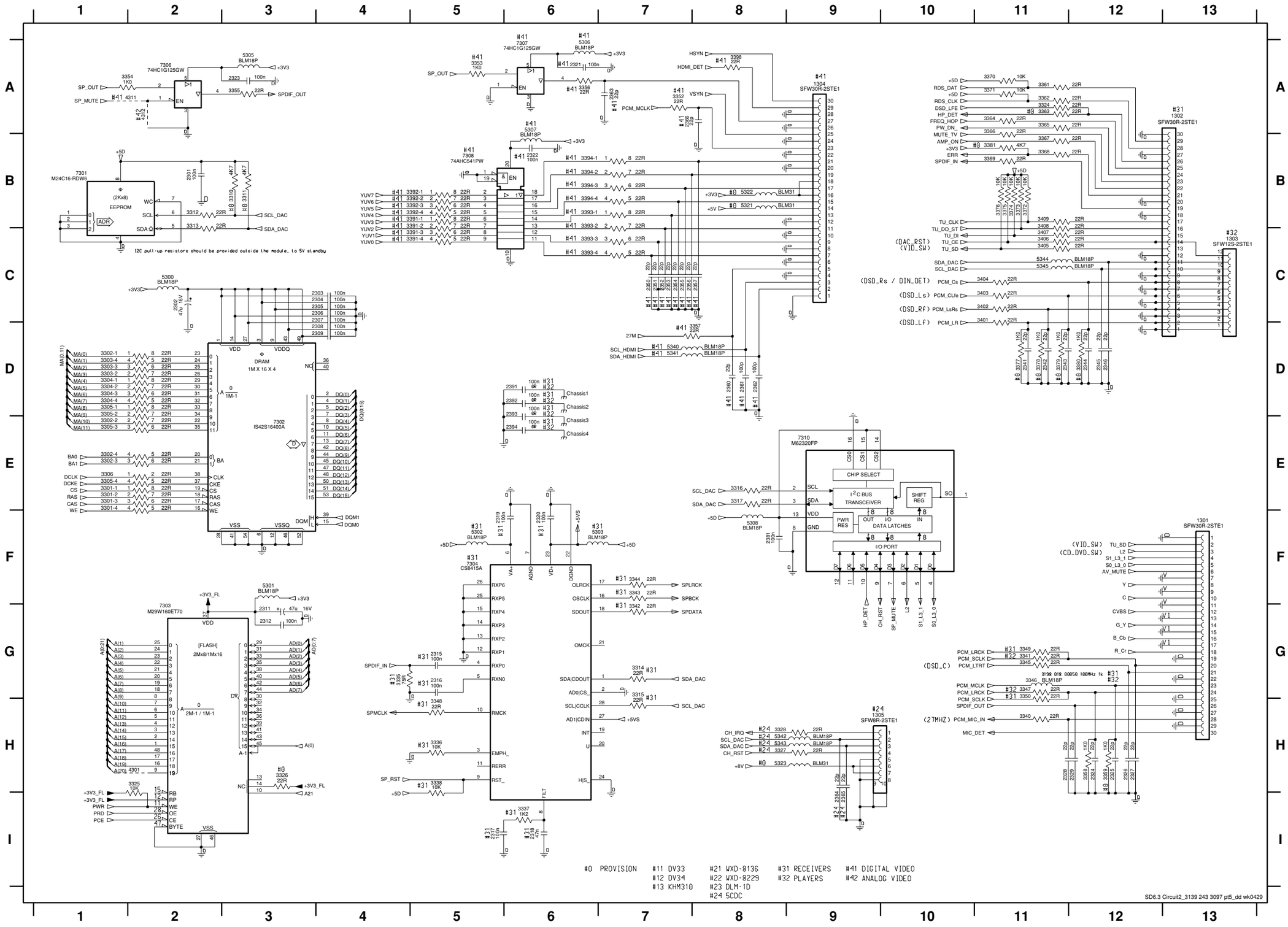

1301 F13
1302 A13
1303 C13
1304 A9
1305 H9
2301 B2
2302 C2
2303 C4
2304 C4
2305 C4
2306 C4
2307 C4
2308 D4
2309 D4
2311 G3
2312 G3
2315 G5
2316 G5
2317 I5
2318 I6
2319 F5
2320 F6
2321 A6
2322 B6
2323 A3
2324 H12
2325 H12
2326 H12
2327 H12
2328 H11
2329 H12
2341 D11
2342 D11
2343 D11
2344 D12
2345 D12
2346 D12
2350 C7
2351 C7
2352 C7
2353 C7
2354 C7
2355 C7
2356 C7
2357 C8
2360 D8
2361 D8
2362 D8
2363 A7
2364 I9
2365 I9
2366 A7
2381 F8
2391 D6
2392 D6
2393 D6
2394 E6
3301-1 E1
3301-2 E1
3301-3 E1
3301-4 E1
3302-1 D1
3302-2 E1
3302-3 E1
3302-4 E1
3303-2 D1
3303-3 D1
3303-4 D1
3304-1 D1
3304-2 D1
3304-3 D1
3304-4 D1
3305-1 D1
3305-2 D1
3305-3 E1
3305-4 E1
3306 E1
3310 B3
3311 B3
3312 B2
3313 B2
3314 G7
3315 G7
3316 E8
3317 E8
3324 A11
3325 H2
3326 H3
3327 H8
3328 H8
3335 G4
3336 H5
3337 I6
3338 H5
3340 H11
3341 G11
3342 G7
3343 F7
3344 F7
3345 G11
3346 G11
3347 G11
3348 H5
3349 G11
3350 G11
3352 A7
3353 A5
3354 A1
3355 A3
3356 A6
3357 D8
3358 H12
3359 H12
3361 A11
3362 A11
3363 A11
3364 A11
3365 A11
3366 A11
3367 B11
3368 B11
3369 B11
3370 A11
3371 A11
3372 B11
3373 B11
3374 B11
3375 B11
3376 B11
3377 D11
3378 D11
3379 D11
3380 D12
3381 B11
3391-1 B5
3391-2 B5
3391-3 C5
3391-4 C5
3392-1 B5
3392-2 B5
3392-3 B5
3392-4 B5
3393-1 B6
3393-2 B6
3393-3 C6
3393-4 C6
3394-1 B6
3394-2 B6
3394-3 B6
3394-4 B6
3398 A8
3401 C11
3402 C11
3403 C11
3404 C11
3405 C11
3406 C11
3407 C11
3408 B11
3409 B11
4301 H2
4311 A2
4312 A2
5300 C2
5301 F3
5302 F5
5303 F6
5305 A3
5306 A6
5307 A6
5308 F8
5321 B8
5322 B8
5323 H8
5340 D7
5341 D7
5342 H8
5343 H8
5344 C11
5345 C11
7301 B1
7302 E3
7303 G2
7304 F5
7306 A2
7307 A6
7308 B5
7310 E9

EXPLODED VIEW - MODULE SD6.3 ST AV2

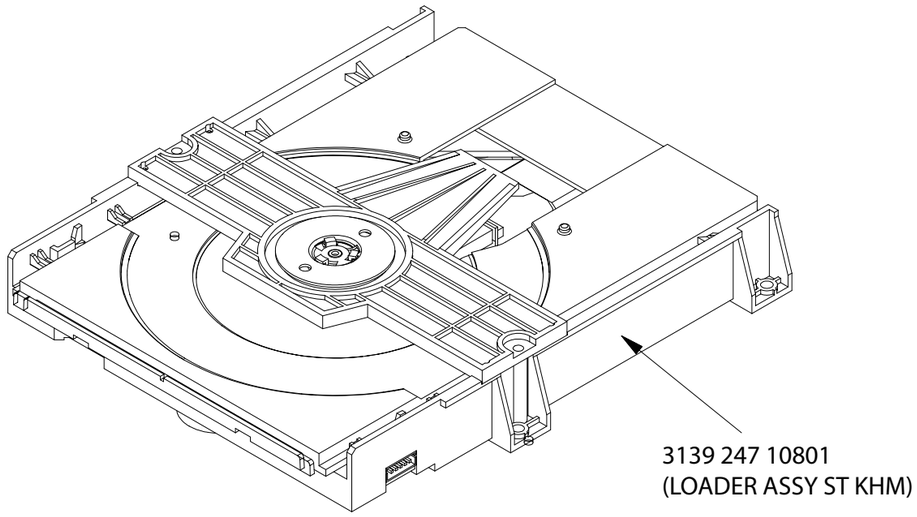

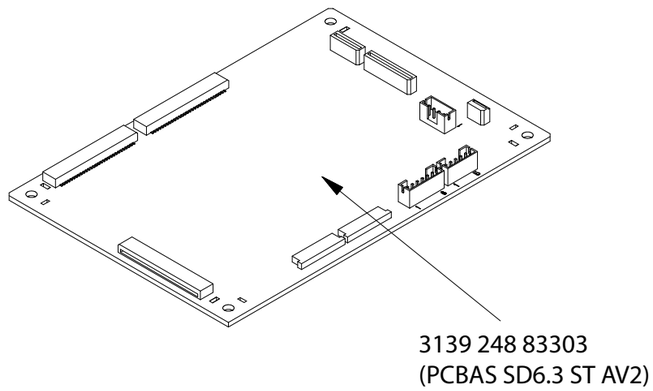

Module SD6.3 ST AV2_dd wk0428

MODULE SD6.3 ST AV2 PARTS LIST

0001	3139 247 10801	LOADER ASSY ST KHM
0002	3139 248 83303	PCBAS SD6.3 ST AV 2
1101	3139 241 00851	FFC FOIL 24P/180/24P AD 0.5MMP

Note : Only the parts mentioned in this list are normal service spare parts.

EXPLODED VIEW - LOADER ASSY ST KHM

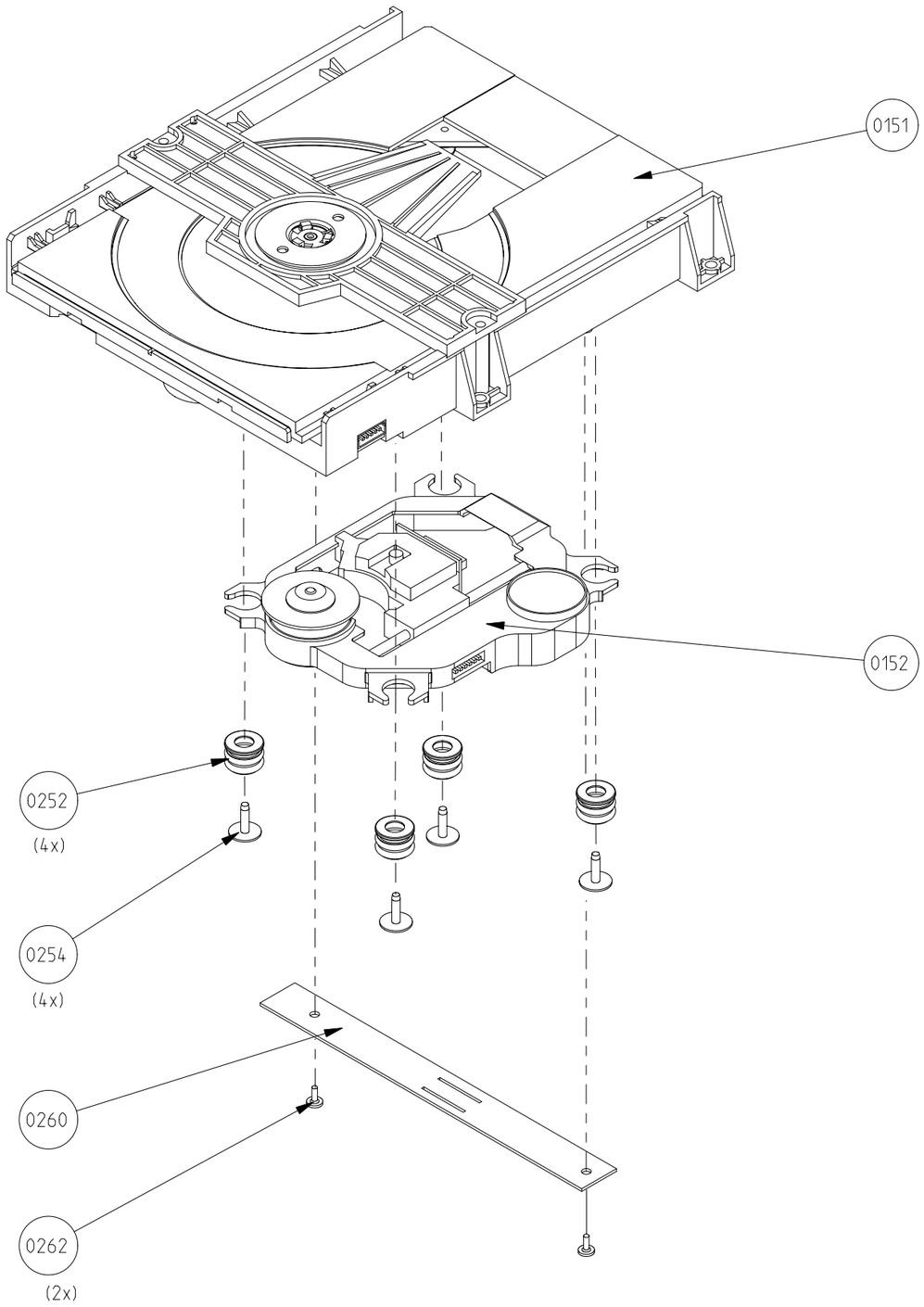

LOADER ASSY ST KHM_3139 247 10801_dd wk0428

9-7

ELECTRICAL PARTS LIST - SD6.3 ST AV2 BOARD

MISCELLANEOUS

1101	2422 025 17529	FLEX CONNECTOR 24P
1104	2422 025 16388	FLEX CONNECTOR 16P
1105	2422 025 17768	FLEX CONNECTOR 9P
1111	2422 025 17201	FLEX CONNECTOR 9P
1112	4822 267 11027	FLEX CONNECTOR 16P
1151	4822 157 11717	IND FXD 1206 EMI 100MHz 50R
1152	4822 157 11717	IND FXD 1206 EMI 100MHz 50R
1153	4822 157 11717	IND FXD 1206 EMI 100MHz 50R
1301	2422 025 17451	FLEX CONNECTOR 30P
1302	2422 025 17451	FLEX CONNECTOR 30P

RESISTORS

3301	2350 035 10229	RST NETW 1206 4X 22R 5%
3302	2350 035 10229	RST NETW 1206 4X 22R 5%
3303	2350 035 10229	RST NETW 1206 4X 22R 5%
3304	2350 035 10229	RST NETW 1206 4X 22R 5%
3305	2350 035 10229	RST NETW 1206 4X 22R 5%
3346	4822 157 11499	IND FXD 0603 EMI 100MHz 60R

COILS & FILTERS

5101	4822 157 11717	IND FXD 1206 EMI 100MHz 50R
5103	4822 157 11499	IND FXD 0603 EMI 100MHz 60R
5104	4822 157 11499	IND FXD 0603 EMI 100MHz 60R
5105	4822 157 11499	IND FXD 0603 EMI 100MHz 60R
5106	4822 157 11499	IND FXD 0603 EMI 100MHz 60R
5107	4822 157 11499	IND FXD 0603 EMI 100MHz 60R
5108	4822 157 11499	IND FXD 0603 EMI 100MHz 60R
5109	4822 157 11499	IND FXD 0603 EMI 100MHz 60R
5111	4822 157 11499	IND FXD 0603 EMI 100MHz 60R
5112	4822 157 11717	IND FXD 1206 EMI 100MHz 50R
5115	4822 157 11499	IND FXD 0603 EMI 100MHz 60R
5116	4822 157 11499	IND FXD 0603 EMI 100MHz 60R
5117	4822 157 11499	IND FXD 0603 EMI 100MHz 60R
5118	4822 157 11499	IND FXD 0603 EMI 100MHz 60R
5119	4822 157 11499	IND FXD 0603 EMI 100MHz 60R
5122	4822 157 11499	IND FXD 0603 EMI 100MHz 60R
5123	4822 157 11499	IND FXD 0603 EMI 100MHz 60R
5124	3198 018 31090	FXD IND SM 0805 10U 10%
5125	3198 018 31090	FXD IND SM 0805 10U 10%
5126	4822 157 11499	IND FXD 0603 EMI 100MHz 60R
5130	2422 543 01393	RES XTL SM 27MHz 10P CX8045
5131	3198 018 41880	FXDIND SM 1210 1U8 5%
5132	3198 018 41880	FXDIND SM 1210 1U8 5%
5133	3198 018 41880	FXDIND SM 1210 1U8 5%
5134	3198 018 41880	FXDIND SM 1210 1U8 5%
5135	3198 018 41880	FXDIND SM 1210 1U8 5%
5136	3198 018 41880	FXDIND SM 1210 1U8 5%
5300	4822 157 11499	IND FXD 0603 EMI 100MHz 60R
5301	4822 157 11499	IND FXD 0603 EMI 100MHz 60R
5302	4822 157 11499	IND FXD 0603 EMI 100MHz 60R
5303	4822 157 11499	IND FXD 0603 EMI 100MHz 60R
5305	4822 157 11499	IND FXD 0603 EMI 100MHz 60R
5308	4822 157 11499	IND FXD 0603 EMI 100MHz 60R
5344	4822 157 11499	IND FXD 0603 EMI 100MHz 60R
5345	4822 157 11499	IND FXD 0603 EMI 100MHz 60R

TRANSISTORS & INTEGRATED CIRCUITS

7101	4822 209 17398	IC SM LD1117DT33
7102	9322 165 15685	IC SM NCP303LSN30
7106	4822 130 11565	TRA POW SM 2SB1132
7107	4822 130 11565	TRA POW SM 2SB1132
7108	9340 547 13215	FET SIG SM BSH103
7108	9322 212 30685	FET POW SM TN0200T
7109	9340 547 13215	FET SIG SM BSH103
7109	9322 212 30685	FET POW SM TN0200T
7110	9340 219 30115	TRA SIG SM BC817-25W
7111	9322 201 94668	IC SM MM1646XH
7112	9322 203 35671	IC SM MT1389E
7121	9340 425 20115	TRA SIG SM BC847BS
7131	9322 212 30685	FET POW SM TN0200T
7131	9340 547 13215	FET SIG SM BSH103
7132	9340 547 13215	FET SIG SM BSH103
7132	9322 212 30685	FET POW SM TN0200T
7301	9322 189 04668	IC SM M24C16-RDW6
7302	9322 199 38671	IC SM IS42S16400A
7302	9322 166 67668	IC SM MT48LC4M16A2TG-7E
7303	9322 194 74668	IC SM M29W160ET70N6
7304	9322 185 10668	IC SM CS8415A-CZ
7306	9352 687 20125	IC SM 74LVC1G125GW
7310	4822 209 17345	IC SM M62320FP

Note : Only the parts mentioned in this list are normal service spare parts.

10-1

SET MECHANICAL EXPLODED VIEW

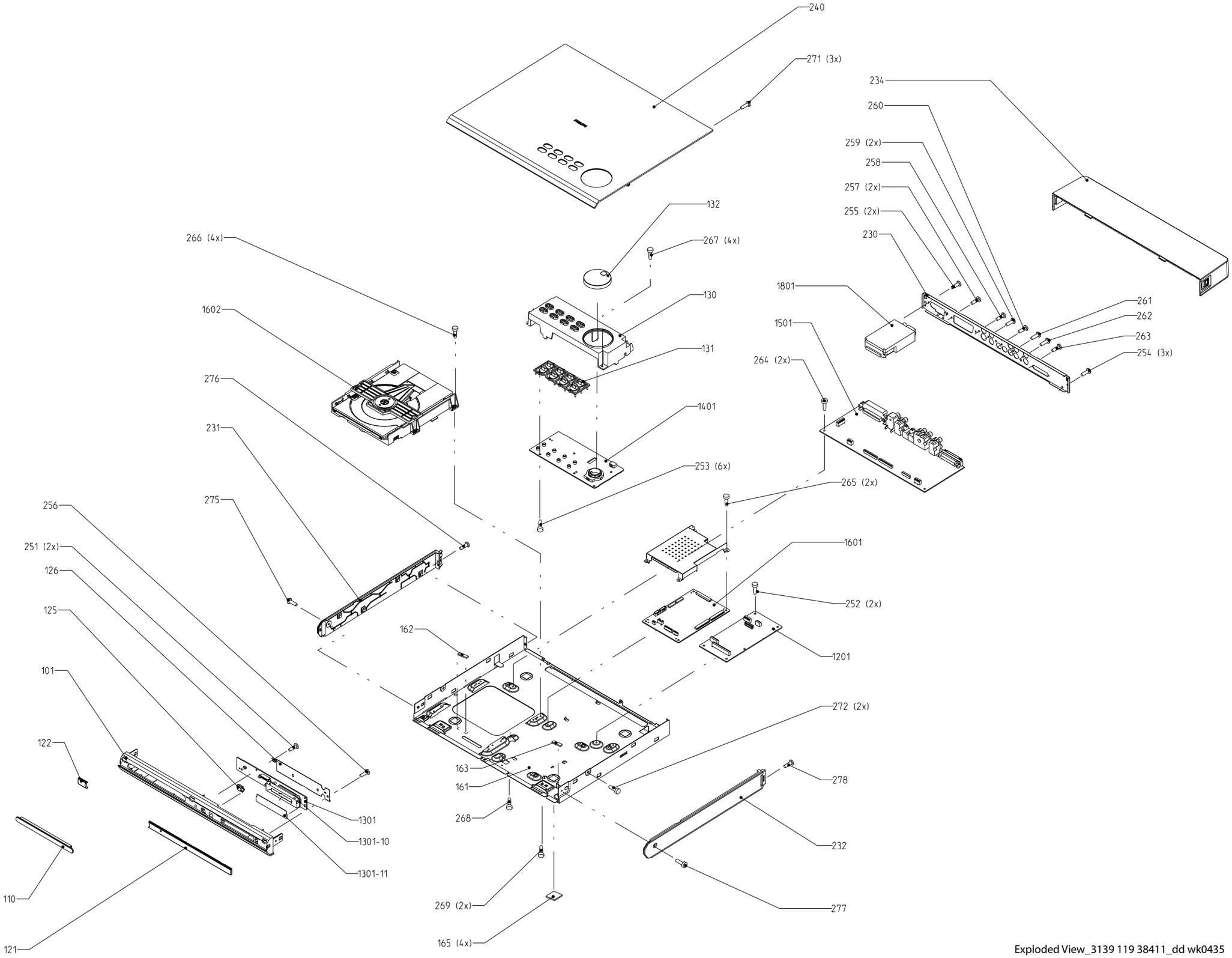

Exploded View_3139 119 38411_dd wk0435

MECHANICAL & ACCESSORIES PARTS LIST - MAIN UNIT

0101	3139 254 00791		CABINET FRONT
0110	3139 254 00761		COVER TRAY
0121	3139 254 00781		WINDOW DISPLAY RIGHT
0122	3139 254 00771		WINDOW DISPLAY LEFT
0125	3139 254 00841		LIGHTGUIDE IR SENSOR
0130	3139 254 00751		BRACKET SUPPORT CONTROL
0131	3139 254 00741		BUTTON SET FUNC CONTROL
0132	3139 254 00731		KNOB VOLUME ROTARY
0165	3139 243 10080		CUSHION FOOT
0231	3139 254 00721		PANEL COVER LEFT
0232	3139 254 00711		PANEL COVER RIGHT
0234	3139 254 00701		COVER REAR CABLE
0326	3139 119 02581		BOX SPK ASSY RS8320LX/69
0328	3139 119 02521		BOX SPK ASSY SW8320LX/69
0329	3139 119 02671		BOX SPK ASSY FCS8320
0331	2422 076 00546		CABLE FM AERIAL
0332	2422 549 45386		ANTENNA AM LOOP
0332	2422 549 45813		ANTENNA AM LOOP
0333	3139 258 70051		REMOTE CONTROL
0336	2422 070 98151	⚠	MAINS CORD /69
0336	2422 070 98257	⚠	MAINS CORD /93
0338	2422 076 00304		CABLE CINCH/CINCH 1M5 YE/RD/WH
0340	3103 308 92610		CABLE AUDIO 2X2RCA MALE 1.5MTR
0341	4822 321 61579		VIDEO CABLE
1501	3139 118 57701		PCBAS AV LX8300SA/69
1801	2422 542 90138		TUN A+F ENG06703Q USA B
8230	3139 111 04121		FFC FOIL 30P/120/30P AD
8240	3139 110 34750		FFC FOIL 05P/080/05P AD
8260	3139 111 04111		FFC FOIL 09P/100/09P AD 1MMP
8520	3139 111 04341		FFC 09P/140/09P AD 1MM FOLDED
8560	3139 111 04271		FFC FOIL 30P/060/30P BD 1MMP
8561	3139 111 04321		FFC 30P/220/30P BD 1MM FOLDED
8562	3139 111 02421		FFC FOIL 16P/220/16P AD 1MMP
8580	3139 111 04081		FFC FOIL 11P/60/11P BD

Note : Only the parts mentioned in this list are normal service spare parts.

10-2

SCREW LISTS - MAIN UNIT

251	D3 x 8
252	M3 x 6
253	D3 x 8
254	M3 x 4
255	M3 x 6
256	D3 x 8
258	D3 x 8
259	D3 x 8
260	D3 x 8
261	D3 x 8
262	D3 x 8
263	M2.6 x 12
264	M3 x 6
265	M3 x 6
266	M3 x 8
268	M3 x 6
269	M3 x 6
271	M3 x 6
272	M3 x 6
275	D3 x 10
276	M3 x 6
277	D3 x 10
278	M3 x 6

EXPLODED VIEW - FRONT/REAR SPEAKER BOX

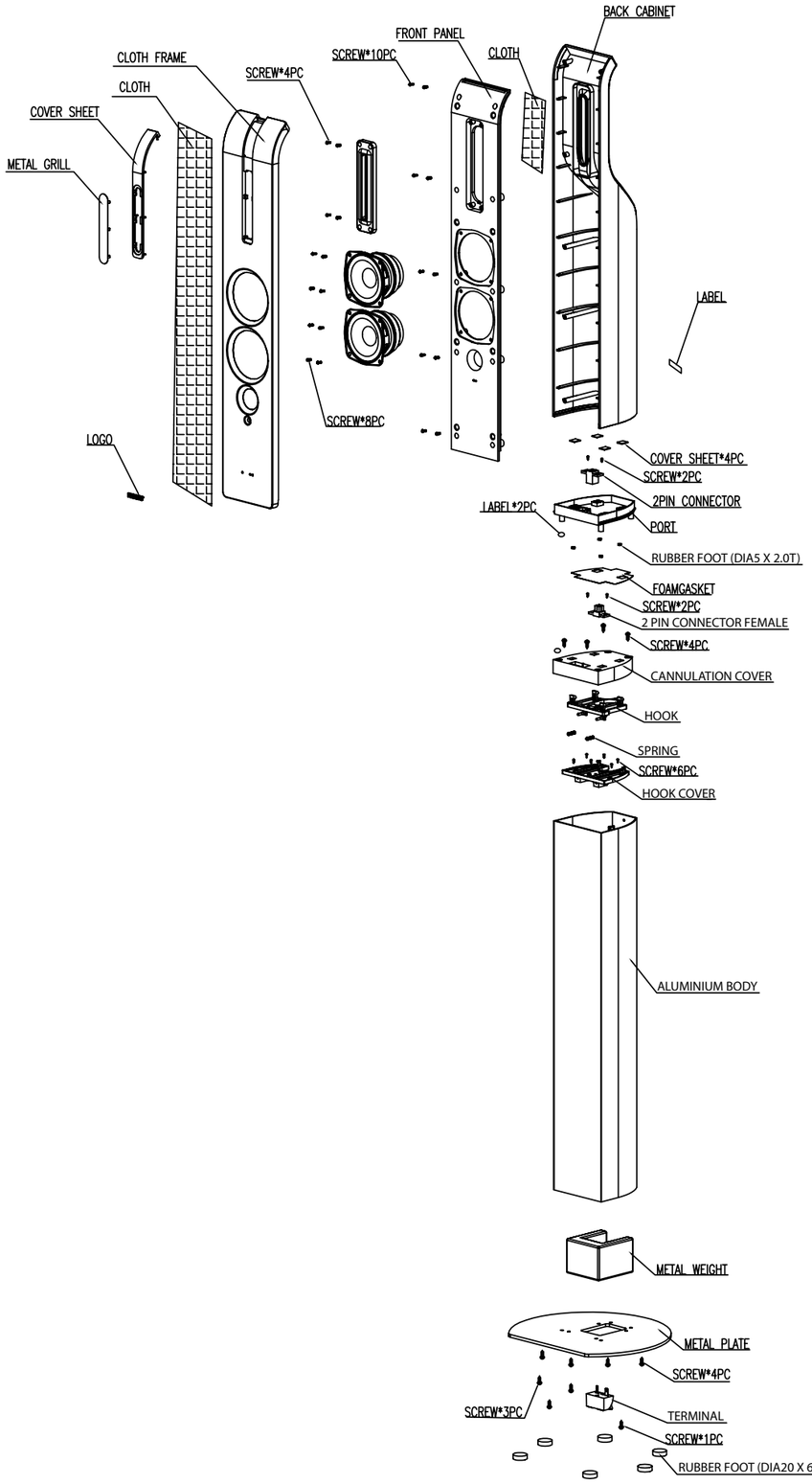

11-1

PARTS LIST - BOX SPK ASSY FCS8320

SPEAKER BOX FRONT L/R:

9965 000 26064	SPEAKER BOX FRONT L
9965 000 26065	SPEAKER BOX FRONT R
9965 000 25740	RUBBER FOOT (DIA5 X 2.0T)
9965 000 25741	2 PIN CONNECTOR FEMALE
9965 000 25742	CANNULATION COVER
9965 000 25749	HOOK
9965 000 25743	SPRING
9965 000 25744	HOOK COVER
9965 000 25764	TERMINAL BLACK/WHITE (FRONT L)
9965 000 25765	TERMINAL BLACK/RED (FRONT R)
9965 000 25752	RUBBER FOOT (DIA20 X 6.0T)

CENTER SPEAKER BOX:

9965 000 26066	CENTER SPEAKER BOX
9965 000 24102	RUBBER FOOT (CENTER)

Note : Only the parts mentioned in this list are normal service spare parts.

PARTS LIST - BOX SPK ASSY RS8320LX/69

SPEAKER BOX REAR L/R:

9965 000 26061	SPEAKER BOX REAR L
9965 000 26062	SPEAKER BOX REAR R
9965 000 25740	RUBBER FOOT (DIA5 X 2.0T)
9965 000 25741	2 PIN CONNECTOR FEMALE
9965 000 25742	CANNULATION COVER
9965 000 25749	HOOK
9965 000 25743	SPRING
9965 000 25744	HOOK COVER
9965 000 26063	TERMINAL BLACK/BLUE (REAR L)
9965 000 25745	TERMINAL BLACK/GREY (REAR R)
9965 000 25752	RUBBER FOOT (DIA20 X 6.0T)

Note : Only the parts mentioned in this list are normal service spare parts.

11-2

DISMANTLING INSTRUCTIONS (SPEAKER BOX)

Dismantling of the Front/Rear Speaker Box

1) The Speaker Box can be separated from the Aluminium Body by using a screw driver as shown in Step 1.

2) Use the screw driver and push in the direction as shown in Step 2 to unlock the Hook.

3) Lift the Speaker Box upward in the direction as shown in Step 3 to detach it from the Aluminium Body.

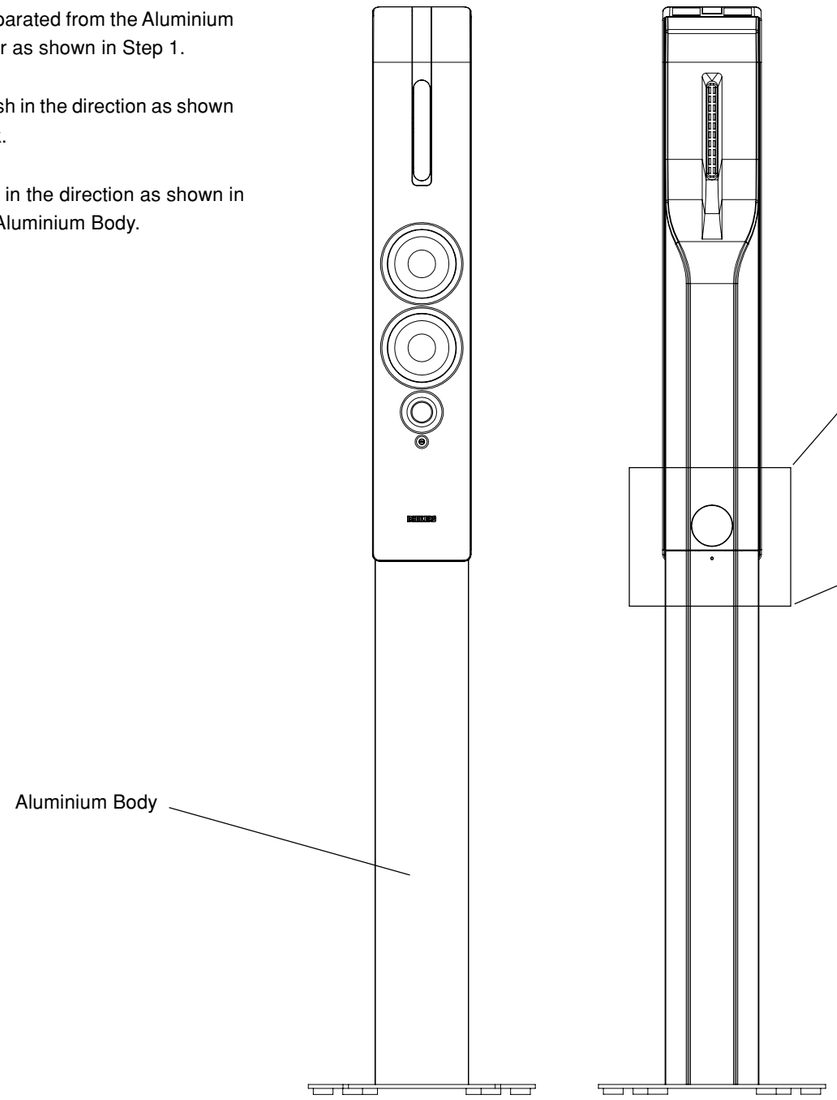

Step 1

Step 2

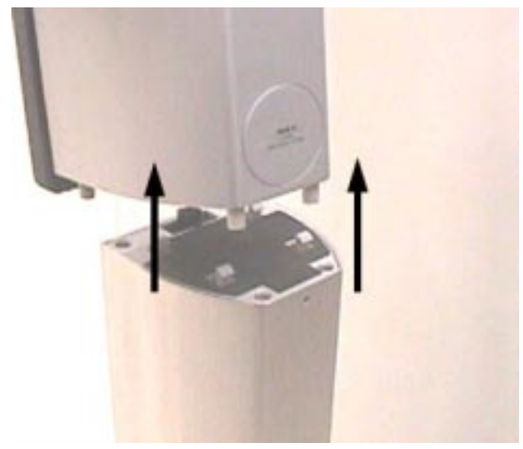

Step 3